TECHNICAL MANUAL

WATER SUPPLY, WATER DISTRIBUTION

HEADQUARTERS, DEPARTMENT OF THE ARMY
NOVEMBER 1986

USF200010999

REPRODUCTION AUTHORIZATION/RESTRICTIONS

This manual has been prepared by or for the Government and is public property and not subject to copyright.

Reprints or republications of this manual should include a credit substantially as follows: "Joint Departments of the Army and Air Force USA, Technical Manual TM 5-813-5/AFM 88-10, Volume 5, Water Supply, Water Distribution, November 1986."

TECHNICAL MANUAL
NO. 5-813-5
AIR FORCE MANUAL
NO. 88-10, Volume 5

HEADQUARTERS
DEPARTMENT OF THE ARMY
AND THE AIR FORCE
WASHINGTON, D.C. *3 November 1986*

WATER SUPPLY, WATER DISTRIBUTION

		Paragraph	Page
CHAPTER 1.	GENERAL		
	Purpose and scope	1-1	1-1
	Definitions	1-2	1-2
	System planning	1-3	1-3
	Cross connections	1-4	1-4
CHAPTER 2.	PRESSURE REGULATION ALTERNATIVES		
	General	2-1	2-1
	Gravity pressure systems	2-2	2-2
	Direct-pressure systems	2-3	2-3
	Pneumatic system	2-4	2-4
	Pressure regulating valves	2-5	2-5
CHAPTER 3.	DISTRIBUTION MAINS		
	Main sizes	3-1	3-1
	Location of mains	3-2	3-2
	Dual water supplies	3-3	3-3
	Recycling used water	3-4	3-4
CCHAPTER 4.	DISTRIBUTION SYSTEMS PRESSURES		
	General	4-1	4-1
	Multiple levels	4-2	4-2
	Pressure-reducing valves	4-3	4-4
	Pressure-relief valves	4-4	4-4
	Waterhammer	4-5	4-5
	Cavitation	4-6	4-6
CHAPTER 5.	DISTRIBUTION SYSTEM EQUIPMENT		
	Valves	5-1	5-1
	Fire hydrants	5-2	5-2
	Water pipe materials	5-3	5-3
CHAPTER 6.	SERVICE CONNECTIONS		
	Tapping of water lines	6-1	6-1
	Service connection materials	6-2	6-2
	Sizes	6-3	6-3
	Installation	6-4	6-4
	Service connections at airfields	6-5	6-5
CHAPTER 7.	DISTRIBUTION SYSTEM DESIGN		
	Minimum pipe cover	7-1	7-1
	Protection of items penetrating frost zone	7-2	7-2
	Cleaning and lining existing water mains	7-3	7-3
	Disinfection of water supply systems	7-4	7-4
	External corrosion	7-5	7-5
	Thrust blocking	7-6	7-6

*Supersedes TM 5-813-5/AFM 88-10, Vol 5, 31 January 1963.

USF200011001

	Standard details	7-7	7-7
	Layout map	7-8	7-8
	Design analysis	7-9	7-9
CHAPTER 8.	TRANSMISSION LINE DESIGN		
	General	8-1	8-1
	Design procedures	8-2	8-2
	Filling procedures	8-3	8-3
	Syphons	8-4	8-8

APPENDIX A. REFERENCES A-1
APPENDIX B. DISTRIBUTION SYSTEM HYDRAULIC ANALYSES B-1
APPENDIX C. THRUST RESTRAINT C-1
BIBLIOGRAPHY BIBLIO-1

USF200011002

LIST OF FIGURES

Figure 3-1 Water distribution system patterns
5-1 Double disc gate valve
5-2 (A) Typical butterfly valve and
(B) Typical small-diameter ball valve
5-3 Schematic of typical dry-barrel fire hydrant
8-1 Typical plan and profile drawings
8-2 Nomograph for Hazen-Williams formula in which C = 100
8-3 Illustration of pipeline pressure
B-1 Equivalent pipe networks
B-2 Example pipe network for Hardy Cross Analysis
C-1 Typical thrust blocking

LIST OF TABLES

Table 3-1 Pipe materials and valves
5-1 Valve applications and standards
5-2 Hydrant distribution
5-3 Pipe type comparison
8-1 Losses in pipe fittings and appurtenances
B-1 Computations for Hardy Cross Analysis
B-2 Initial flow assumptions
B-3 Final flow values
C-1 Soil friction and cohesion factors
C-2 Reduction factors

USF200011003

USF200011004

CHAPTER 1

GENERAL

1-1. Purpose and scope. This manual provides criteria for design and construction of potable water distribution systems for fixed military installations. Within the context of this manual, a water distribution system is considered to consist of all mains, service lines, valves, pumps, hydrants, and ancillary equipment needed to carry water from the source of potable water to the various points of use. Water distribution within an individual building or group of buildings is covered in TM 5-810-5/AFM 88-8, Volume 4. This manual is applicable to all elements of the Army or Air Force charged with planning or performing military construction.

1-2. Definitions. The following definitions, in addition to those given in paragraph 1-4, TM 5-813-1/AFM 88-10, Volume 1 are applicable to this manual.

a. Backflow. The flow of any foreign liquids, gases, or other substances into the distributing pipelines of a potable supply of water from any source or sources not intended.

b. Back-siphonage. The backing up, or siphoning, of a foreign liquid into a potable water system; this occurs when the potable water system, at any point or place, is at a pressure less than atmospheric, with an opening or break in the system, thereby drawing the foreign liquid toward the potable water.

c. Cross connection. Any physical connection which provides an opportunity for nonpotable water to contaminate potable water.

d. Distribution mains. All pipelines of the distribution system, except the small service pipes connecting building systems to the supply.

e. Transmission mains. Those pipelines or conduits which carry water from one point to another without intermediate service connections; e.g., pipelines from a pumping station to a reservoir.

1-3. System planning. The distribution system must reliably and economically supply water, in adequate quantities and at adequate pressures, to all water users. In order to plan or design a water distribution system, the location or point of demand must be known or assumed, and the magnitude of each demand known or estimated; water demands may then be categorized by purpose as domestic, industrial, special, or fire protection. Criteria for determining water demands are discussed in TM 5-813-1/AFM 88-10, Volume 1; AFM 88-10, Chapter 6; and TM 5-813-7/AFM 88-10, Volume 7. Criteria for sizing and locating water treatment plants and water storage facilities are presented in TM 5-813-3/AFM 88-10, Volume 3; and TM 5-813-4/AFM 88-10, Volume 4. Sizing of the water treatment plant, water storage facilities, distribution pumps, or distribution mains, is dependent on the size of the other parts of the system. It is not practical to size individual distribution mains without considering the other elements of the system. The effectiveness of any proposed combination of storage, pumping, and distribution works in meeting projected peak demands is best determined by hydraulic analyses of the system. Such hydraulic analyses, usually performed on digital computers, are very helpful to system planning.

1-4. Cross connections. (Cross connections and backflow prevention for Air Force facilities are defined in AFM 85-21).

a. Avoidance of cross connections. If fires are to be fought with both potable and nonpotable supplies, separate distribution systems must be used to deliver the two types of water to the required area. Hydrants or other connections for each system should be suitably identified to discourage improper use. Standby water reservoirs serving fire protection systems are sometimes filled from both potable and nonpotable supplies. If this is the case, the potable water shall be discharged to the reservoir through an air break not less than 12 inches above the maximum water level of the reservoir. In a similar manner, where potable water is to be used as gland seal on a pump handling nonpotable water, the potable water must be stored in a tank with an air gap between the end of the water supply line and the top of the tank. Special care must also be taken of such items as valve pits and water storage facilities to ensure that surface water runoff cannot enter potable water systems. Other situations that can result in back-siphonage are flexible hose having one end immersed in nonpotable water and the other end connected to a potable water hose bib, potable waterlines entering swimming pools

USF200011005

without air gaps, lawn irrigation systems with sprinkler heads flush with the ground, and improper connections at vehicle wash racks.

b. Prevention of backflow. Devices for the prevention of backflow include air gaps and reduced-pressure-principle backflow preventers. Air gap distances should be at least twice the diameter of the water supply line, and reduced-pressure-principle backflow prevention devices should meet the criteria of American Water Works Association (AWWA) C506 (See app A for references). Double check valves for backflow prevention are not considered suitable and should not be used. Back-siphonage can be prevented with air gaps, atmospheric-type vacuum breakers, or pressure-type vacuum breakers.

USF200011006

CHAPTER 2

PRESSURE REGULATION ALTERNATIVES

2-1. General. The pressure levels for the distribution system are set by chapter 4. Alternative means to maintain these pressures consist of gravity systems, direct pressure systems, pneumatic system or a combination of the above. Pressure regulating valves are available to reduce system pressures if required.

2-2. Gravity pressure systems. This is the preferred method of maintaining adequate pressure in the system. Gravity pressure systems are inherently associated with elevated storage. A storage facility provides a reservoir in which the inflow and outflow of water can better match the hourly consumer demand and can be a supply source during emergency situations such as interruptions in the normal supply service or heavy demands for fire fighting. Reservoirs should be located within or adjacent to load centers (i.e., areas of high demand) of the distribution grid to meet water demands in those areas without causing high velocities and head losses in the distribution mains. The pressure in the system supplying water to the storage facility needs to be sufficient to fill the reservoir. If it is not, booster pumps may be required. Two types of tanks may be used in a gravity pressure system: elevated and ground storage tanks.

a. Elevated tank. Where ground elevations are relatively uniform, an elevated tank will be considered to maintain pressure in lieu of ground storage facilities where practical. The tank will be adequately sized in accordance with TM 5-813-4/AFM 88-10, Vol. 4. The height of the tank will be determined from the topography of the area served, the height of the buildings and the pressure losses in the distribution system. Standard and special designs are available in sizes up to 3,000,000 gallons. Standard design will be utilized except where special conditions warrant other designs. Special designs on Air Force projects will be subject to approval by HQ USAF/LEEEU, Washington, D.C. 20332. In addition, altitude valves, check valves and shut off valves are necessary to control the level of water in the tank and to provision or isolate portions of the distribution system during emergencies. These are to be contained in a valve pit near the base of the tank, protected from freezing, and will provide for appropriate connections to the distribution system.

b. Ground level storage. Ground level storage can consist of steel standpipes and steel or concrete ground storage reservoirs. These are to be designed where there is sufficient difference in ground elevation to maintain adequate pressure in the distribution system. Concrete reservoirs can be designed for any size system, but are more often used for larger sizes, i.e., those exceeding 1,000,000 gallons. Standpipes of 6 to 20 feet in diameter may be installed for small systems. If the differences in natural ground elevations is insufficient to maintain pressures, booster pumps may be required in conjunction with ground storage to increase system pressure.

c. Sizing of storage volume. The maximum and minimum elevations of water in the tank determine the pressure in the distribution system and should be designed accordingly. The required volume determines the surface area of the tank which is based on daily use and fire flow demand. Refer to TM 5-813-4/AFM 88-10, Vol. 4.

2-3. Direct-pressure systems. A direct pressure distribution system is one in which no elevated storage is provided, and the required distribution pressures are maintained only by pumping facilities. A ground level storage tank may be provided to serve as an intake supply for the pumping facilities. Direct-pressure distribution systems will be considered only where the military use or special requirements will not permit the utilization of elevated storage tanks. Caution must be used in design to reduce surge pressure and compensate for variable volume demands. Provisions must be made to ensure the availability of sufficient supply to meet fire and emergency demands. The pumping facilities in a direct-pressure system must have firm capacities equal to or greater than the peak demand rates exerted on the system. The firm capacity of a pumping facility is the total pumping capacity with the largest pump out of service. Automatic controls are available which react to pressure sensors and cycle the pumps according to a sequence which may be predetermined by the operator.

USF200011007

a. Pumping stations. For variable flow requirements, consideration will be given to variable speed pumps, multiple pumps with stage control, flow regulating valves, or flow recirculation. The usual location is at the supply and treatment facility. Additional units may be located within the distribution system. Consideration should be given to providing a by-pass around pumps in the distribution system so that some flow may be maintained even when the pump is out of service. The pumps and associated equipment shall be contained in a vault or pump house to protect the equipment from the environment.

b. Line boosters. Line booster stations may be designed where system head loss dictates their use. This may include distribution system areas that are remote from pumping stations, high rise building areas where normal pressure is inadequate, localized areas of higher elevation or extensions to existing distribution system where the cost of additional elevated storage is prohibitive. These pumps may be submersible turbine pumps, mounted in housings which can be installed in a water main much the same as a regular section of pipe. The pumps may be buried underground. As with all electrical-mechanical devices, they are subject to maintenance needs. Therefore, provision must be made for future maintenance which may include excavation of the installation. Other types of pumps, most commonly centrifugal, may be installed in a vault or pump house. This installation is designed as any other pump station.

c. Multiple pressure levels. In multiple pressure level distribution systems, where pumps are installed in the system, the designer should check for circulation around the pumps. If recirculation of water from the high pressure system to the low pressure system is possible, which would cause the water to be pumped twice, distribution line valves must be closed or check valves should be installed.

2-4. Pneumatic System. A hydropneumatic tank "riding" on the system serves two functions. First, it can act as a reservoir of water for emergency supply for a short period of time such as a supply for a sprinkler head; second, it can act as an air spring or piston and is a reservoir of stored energy to maintain pressure in the system and help avoid short-cycling of the pumps.

a. Applicability. Hydropneumatic distribution systems are applicable where demands are less than 500 gallons per minute. Hydropneumatic tanks will be designed and constructed in accordance with ASME Boiler and Pressure Vessel Code, Section VIII.

b. Pressure settings. The low pressure setting on the hydropneumatic tank is determined by distribution system requirements. The recommended minimum operating pressure is 30 pounds per square inch (psi), at the highest ground elevation in the distribution system. The high pressure setting on the hydropneumatic tank is dependent on the maximum allowable pressure in the distribution system. The recommended maximum operating pressure is 100 psi. For a specific application, the pressure variation in the tank is normally about 20 psi. The low water level (water level at the low pressure setting) must be high enough to provide a water seal. At the low water level, the water remaining in the tank should be at least 10 percent of the capacity of the tank. The high water level should be calculated to provide maximum efficiency. The pumps will be sized to deliver 125 percent of the calculated peak demand of the distribution system. The tank size will be at least 10 times the rated capacity of the pump. The tank will be sized so that the pump cycles not less than 4 times per hour, nor more than 10 times per hour, unless the pump motor horse-power rating exceeds 50, in which case the maximum number of cycles will be 6 per hour. Completely automatic hydropneumatic tank controls are available to maintain proper operating conditions (correct air-water volume ratios) during each pump cycle. An auxiliary air compressor-type, air charging system will be used for tanks larger than 750 gallons and pressures higher than 75 psi. An air volume control valve operation will be used to maintain correct air-water volume ratios for all other applications.

2-5. Pressure regulating valves. Pressure regulating valves function to reduce an existing high pressure to a uniform downstream pressure. Although this function can be accomplished by partially closed line valves, this method requires manual operation or motorized operators with remote control and continuous monitoring. Automatic pressure reducing and sustaining valves are available which react to distribution system pressures. These valves operate on two principles.

a. Direct action. A direct-acting regulator cannot regulate pressure closely if considerable range of variation between the wide open and nearly closed positions is required. The regulated pressure is influenced considerably by variations in the high-pressure side, and a great differential must always exist between the high side and the regulated side. Such regulators give excellent service in small sizes where accurate regulation is not important or where the rate of flow is fairly steady.

USF200011008

b. Pilot operated. In water distribution regulation, it is important to sustain the pressure as load increases. With pilot-operated reducing valves, it is possible to get extremely close regulations at any flow up to the full capacity of the valve wide open. Pilot-operated valves may chatter and perform improperly when flow is very small and the disc or piston is close to the seat. Each valve must be provided with two gate valves, permitting it to be shut off for repairs without interfering with other valves. Pressure regulators, like other automatic equipment, should be inspected weekly to insure good operation and discover the need for preventive maintenance before a serious breakdown occurs.

USF200011009

USF200011010

CHAPTER 3

DISTRIBUTION MAINS

3-1. Main sizes. Maximum and minimum distribution systems pressure requirements are given in chapter 4. Distribution system hydraulic analysis are given in appendix B. Water distribution mains of various materials are readily available in sizes ranging from 6 to 48 inches inside diameter; large pipes up to 144 inches and greater can be specially made. Minimum diameter for distribution mains and fire branches is 6 inches.

a. Domestic requirements. The system should be capable of delivering the peak domestic demand as described in TM 5-813-1/AFM 88-10, Volume 1, plus any special requirements, at pressures not lower than 30 pounds per square inch at ground elevation. The required daily demands should be determined by calculating the effective populations of various areas to be served and applying the appropriate per capita water allowances (TM 5-813-1/AFM 88-10, Volume 1). Guidance on the estimation of demands at special projects is given in TM 5-813-7/AFM 88-10, Volume 7. For small installations not having elevated storage, the peak domestic demand will be determined on a fixture basis (TM 5-810-5/AFM 88-8, Volume 4).

b. Fire Flows. The distribution system will be designed to deliver the necessary fire flow requirements, the required daily demand (TM 5-813-1/AFM 88-10, Volume 1), and any industrial or special demands which cannot be reduced during a fire. When only hose streams are supplying the required fire flow streams, residual ground level water pressures at fire hydrants should be not less than 10 pounds per square inch. If sprinkler systems are used, residual pressures adequate for proper operation of the sprinkler systems must be maintained. Specific guidance as to fire flows and pressure required for various structures and types of fire protection systems is given in AFM 88-10, Chapter 6 for Air Force applications and MIL-HDBK-1008 for Army applications.

c. Friction losses. In computing head losses due to friction in a distribution system, the Hazen-Williams formula, as given below, will be used.

$$V = 1.318\, CR^{0.63}S^{0.54} \qquad \text{(eq 3-1)}$$

where

V = the mean velocity of the flow, in feet per second.

R = the hydraulic radius of the pipe in feet, i.e., the cross-sectional area of a flow divided by the wetted perimeter of the pipe. For a circular pipe flowing full, the hydraulic radius is equal to one-fourth the pipe diameter.

S = the friction head loss per unit length of pipe (feet per feet).

C = a roughness coefficient, values of which depend on the type and condition of pipe. Typical values of this coefficient are shown in table 3-1.

Table 3-1. Pipe materials and valves

Pipe Material	C
Concrete (regardless of age)	130
Cast iron:	
New	130
5 years old	120
20 years old	100
Welded steel, new	120
Wood stave (regardless of age)	120
Asbestos-cement	130
Plastic (PVC, Fiberglass)	130

Values as high as 150 are claimed for plastic pipe. The values shown in table 3-1 are considered practical limits because of losses that may result due to fittings and valves, and because of improper installation. Hydraulic analyses will normally be made using a value of 100 for the roughness coefficient. However, consideration should be given to the use of coefficients greater than 100 when specifying concrete, asbestos-cement, or plastic pipe under conditions that experience has shown will not seriously reduce the carrying capacity of these pipes, within the anticipated economic life of the project. Coefficients greater than 130 should not be used. In some cases, expansions to existing distribution networks, rather than entirely new networks, must be planned. In such instances, it may be desirable to determine the roughness coefficients of the existing pipelines

USF200011011

through a series of coefficients tests. These involve isolating sections of pipeline to the greatest extent possible, measuring the flow through the pipelines, and monitoring the changes in the hydraulic gradient between different points on the same pipes. This information can be used to derive the friction head loss per unit length of pipe, and, in turn, a roughness coefficient can be calculated.

d. Fire-hydrant branches. Fire-hydrant branches (from main to hydrant) should not be less than 6 inches in diameter and as short in length as possible, preferably not longer than 50 feet with a maximum of 300 feet.

3-2. Location of mains.

a. General. Mains should be located along streets in order to provide short hydrant branches and service connections. Mains should not be located under paved or heavily traveled areas and should be separated from other utilities to ensure the safety of potable water supplies, and that maintenance of a utility will cause a minimum of interference with other utilities.

b. Distribution system configuration. The configuration of the distribution system is determined primarily by size and location of water demands, street patterns, location of treatment and storage facilities, and topography. Two patterns of distribution main systems commonly used are the branching or dean end, and gridiron patterns.

(1) *Branching system.* The branching system shown in figure 3-1 evolves if distribution mains are extended along streets as the service area expands. Dead ends in the distribution system are undesirable and should be avoided to the extent possible.

(2) *Gridiron system.* The second distribution configuration is the gridiron pattern shown in figure 3-1. The gridiron system has the hydraulic advantage of delivering water to any location from more than one direction, thereby avoiding dead ends. The use of a gridiron pattern looped feeder system is preferable to the use of a gridiron pattern with a central feeder system because the looped feeder supplies water to the area of greatest demand from at least two directions. A looped feeder system should be used for water distribution systems whenever practicable. Although it is advantageous to have all water users located within a grid system, it is often impracticable to do so. Water is normally delivered to a remote water user, or a small group of users, by a single distribution main. Therefore, the majority of the water users are served within a gridiron system while the outlying water users are served by mains branching away from the gridiron system. Branching mains should be avoided to the greatest extent possible.

c. Horizontal separation between water mains and sewers. Water mains should be laid horizontally, a minimum of 10 feet, from any point of existing or proposed sewer or drain line. Water mains and sewers must not be installed in the same trench. If any conditions prevent a horizontal separation of 10 feet, a minimum horizontal spacing of 6 feet can be allowed, but the bottom of the water main must be at least 12 inches above the top of the sewer. Where water mains and sewers follow the same roadway, they will be installed on opposite sides of the roadway, if practicable.

d. Water main sewer crossings. Where water mains and sewers must cross, the sewer will have no joint within 3 feet of the water main unless the sewer is encased in concrete for a distance of at least 10 feet each side of the crossing. If special conditions dictate that a water main be laid under a gravity-flow sewer, the sewer pipe should be fully encased in concrete for a distance of 10 feet each side of the crossing, or should be made of pressure pipe with no joint located within 3 feet horizontally of the water main, as measured perpendicular to the water main. Pressure sewer pipe shall always cross beneath water pipe and a minimum vertical distance of 2 feet between the bottom of water pipe and the top of pressure sewer pipe shall be maintained. The sewer must be adequately supported to prevent settling.

e. Protection in airfield pavement areas. Water mains should not be located under airfield pavement areas if other locations are available and economically feasible. Special protection of the mains are required when alternative locations are not available and it is necessary to locate water mains under pavement areas on which aircraft move under their own power. The amount of protection needed is dependent upon the importance of maintaining a supply of water to the area served by the main, and on the availability of emergency water supplies to the affected area. The degrees of protection should be considered as follows:

(1) *Minimum protection.* The water main must be enclosed in a vented, open-end, outer conduit from which the main can be removed for repairs or replacement. The outer conduit must have sufficient strength to support all foreseeable loadings.

(2) *Intermediate protection.* Intermediate protection requires the water service to be carried under the airfield pavement by dual waterlines enclosed in an outer conduit or, preferably, in separate conduits.

USF200011012

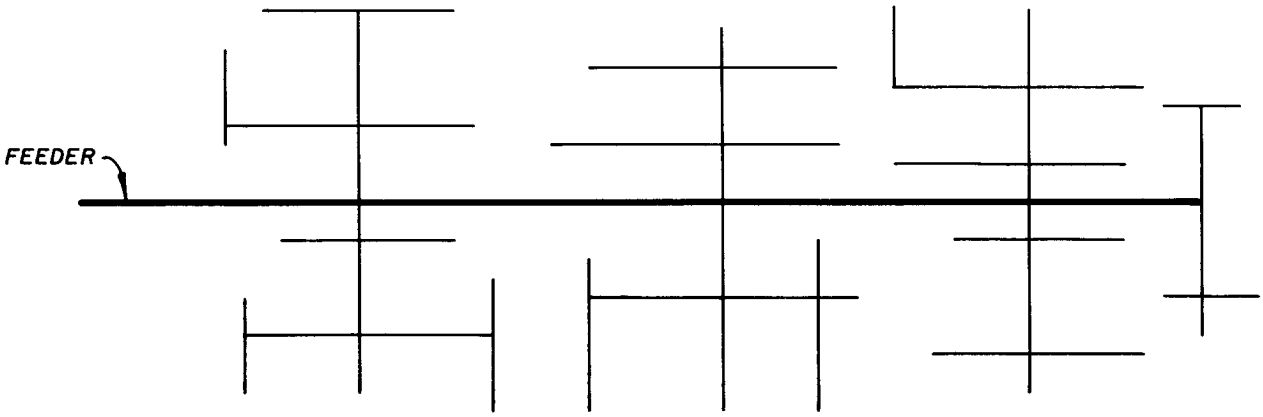

(A) BRANCHING OR DEAD-END PATTERN

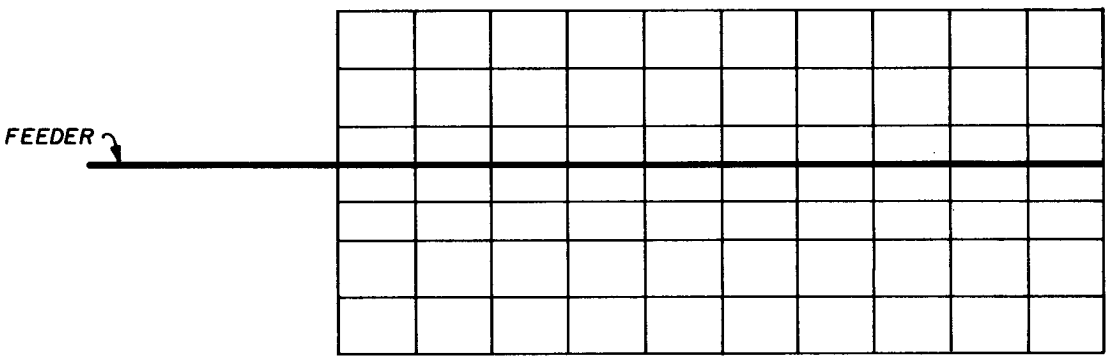

(B) GRIDIRON PATTERN WITH CENTRAL FEEDER

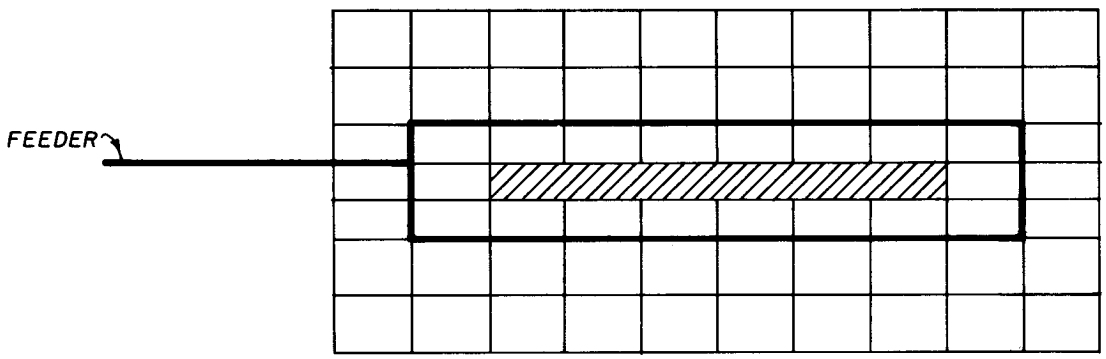

(C) GRIDIRON PATTERN WITH LOOPED FEEDER
(AREA OF HIGHEST DEMAND CROSS-HATCHED)

WATER DISTRIBUTION SYSTEM PATTERNS

Figure 3-1. Water distribution system patterns.

USF200011013

(3) *Maximum protection.* Where more than one utility crosses the airfield pavement and individual crossings would be more expensive than a combined crossing, the utilities will be enclosed in a utility tunnel of sufficient size for in-place repairs. Special precautions must be taken in the placement and protection of individual utility lines within the tunnel to ensure that failure of one utility does not affect the service of the others. Special protection of mains is not required where the mains are located beneath pavement areas that are not normally subject to the movement of aircraft under their own power, such as hangar access aprons on which aircraft would be towed.

3-3. Dual water supplies.

a. Applicability. Dual water supply systems consist of independent pipe networks supplying two grades of water to users. The higher quality water is used for domestic purposes such as drinking, cooking, dishwashing, laundry, cleaning, and batching; the lower quality water may be used for toilet flushing, fire fighting, lawn and garden watering, and commercial or industrial uses not requiring high quality water. Dual water supply systems are not feasible except under unusual circumstances. A dual water supply might be utilized when the only available water supply is brackish and the cost of a dual system is less than the demineralization cost of all the water supplied to users; or when only a limited quantity of higher quality water is available, and it is more economical to construct a dual system than to implement the required treatment of the lower quality water. If a dual water supply system is established and the lower quality water use might result in human contact or ingestion (e.g., toilet flushing, lawn and garden watering), both water supplies must be disinfected.

b. Evaluation of dual water supply system. The design of dual water supplies will be determined using results of feasibility studies which have substituted all engineering, economic, energy, and environment factors. If a dual water supply system is installed and a brackish water is used as the lower quality water, metallic pipes and plumbing facilities exposed to the brackish water may have considerably short lifespans than similar facilities exposed to water of better mineral quality. There will be no connection between the two pipe networks of a dual distribution system.

3-4. Recycling used water. There are operations that generate effluent water than can be reused for the same operation after minimal treatment. This does not constitute a dual system. Examples of such effluents are laundry wastes, vehicle washrack waste water, and plating operations waste water. Recycling of such water should be practiced wherever feasible.

USF200011014

CHAPTER 4

DISTRIBUTION SYSTEMS PRESSURES

4-1. General. Water distribution systems should be designed to maintain operating pressures within the system between 40 and 75 pounds per square inch at ground elevation. Minimum pressures of 30 pounds per square inch under peak domestic flow conditions can be tolerated in small areas as long as the distribution system is also capable of meeting fire flow requirements to these areas. Minimum ground-level residual pressures at fire hydrants will be at least 10 pounds per square inch while supplying fire flows. Maximum pressures of 100 pounds per square inch can be allowed in small, low-lying areas not subject to high flow rates and surge pressures. Areas of excessively high or low pressures require that the system be divided into multiple pressure levels.

4.2 Multiple levels. Where multiple-level systems are required, it is desirable to establish the lines of separation so that the pressures in each system will approach the optimum range of 40 to 75 pounds per square inch. Three or more levels will not be used unless distribution pressures in a large area of the two-level system fall below 30 pounds per square inch, or approach or exceed 100 pounds per square inch. In all circumstances, fire flows must be adequate.

4-3. Pressure-reducing valves. Pressure-reducing valves wil be required in areas of the distribution system that have pressures in excess of 100 pounds per square inch. The pressure-reducing valves may be installed on the mains serving these areas or on the individual building service lines in high-pressure areas. If pressure-reducing valves are to be installed on individual service lines, the preferred location is adjacent to, and upstream from, the water meter for each building or immediately inside the building being served. In some cases, it may be necessary to install pressure-reducing valves only on lines to certain plumbing or heating units which are adversely affected by excessive pressures.

4.4 Pressure-relief valves. Pressure-relief valves should be installed in all systems which might be subjected to greater than allowable pressures. In systems with 100-pounds per square inch pumps, the pressure-relief valves should be set to discharge at 120 pounds per square inch; pressures greater than 120 pounds per square inch may be experienced for brief periods during testing or operation of these pumps. All pumps driven by variable speed motors or engines should be provided with relief valves; and if the shutoff pressure of any pump exceeds 120 pounds per square inch, the pressure-relief valves should be installed and set at approximately 120 pounds per square inch.

4.5 Waterhammer.

a. Definition. Waterhammer is sometimes called surge or transient pressure. The phenomena is caused by rapid changes in flow in closed conduits which cause pressure waves to travel through the liquid, both upstream and downstream from the point of origin.

b. Causes. The most common causes of waterhammer include rapid valve closure, starting and stopping of pumps and conduit failure. Types of valves include main lines, fire hydrant or reservoir fill. Other causes include a sudden stop in usage by a large customer or the sudden joining of a column of water that had been separated by a vacuum.

c. Pressure analysis. Consideration of waterhammer and transient pressure surges is based on the elastic wave theories of Joukowski and Allievi. The basic concepts are:

– the magnitude of the pressure rise is proportional to the changes in fluid velocity and pressure wave.

– the pressure rise is independent of the length and profile of the pipe.

– the velocity at the pressure wave is the same as the velocity of sound through water.

The problem becomes complex in an actual pipeline because the pressure wave is reflected at a line terminus and then travels back to the point of origin, where it may again be reflected. This continues until the wave is dampened by friction. All waterhammer problems ultimately require the determination of line pressure at one or more locations along a pipeline, at one or more points in time. The waterhammer pressure is the result of the combined effect of all direct and reflected pressure waves.

USF200011015

d. Prevention and control. Waterhammer due to valve closure can be minimized by the use of slow closing valves. Surges caused by the starting or stopping of centrifugal pumps can usually be prevented by use of check valves on the pump's discharge line. Other methods of control include pressure relief valves, anticipating pressure relief valves, vacuum relief valves, surge tanks and air chambers.

4-6. Cavitation. Cavitation is a complex phenomenon that may take place in pumps. In a centrifugal pump, as liquid flows through the suction line and enters the eye of the impeller, the velocity increases and pressure decreases. If the pressure falls below the vapor pressure corresponding to the temperature of the liquid, pockets of vapor will form. When the vapor pockets in the flowing liquid reach a region of higher pressure, the pockets collapse with a hammer effect causing noise and vibration. Tests have shown that extremely high instantaneous pressures may be developed in this manner, resulting in pitting various parts of the pump casing and impeller. Conditions may be mild or severe and mild cavitation may occur without much noise. Severe cavitation can result in reduced efficiency and ultimate failure of the pump if steps are not taken to eliminate the cause.

USF200011016

CHAPTER 5

DISTRIBUTION SYSTEM EQUIPMENT

5-1. Valves. The types of valves most frequently used in water distribution are gate, butterfly, ball, plug, globe, and check valves. Applications of the various types of valves and the standards to be used for these valves are given in table 5-1. All valves should have the direction to open shown on their operators.

a. Gate valves. Gate valves may have either a single solid wedge gate or double disc. Solid wedge gates are satisfactory in sizes up to 6 inches, but double disc gates should be used for larger sizes. Because of the excessive wear and leakage of the gates and seats which may result, gate valves should not be used where frequent operation is required. If gate valves are left open for long periods, debris may accumulate in the seats and prevent complete closure, but if left closed for long periods, deposits may prevent opening. Gate valves should be operated periodically to break loose any deposits which might have formed. Large gate valves should be geared to make operation easier. A typical double gate valve is shown in figure 5-1.

b. Butterfly valves. The advantage of butterfly valves include easy operation, small space requirement, low cost, minimum maintenance, low head loss, driptight shutoff, suitability for throttling, and reliability. A disadvantage is that main cleaning and lining equipment cannot be used in lines containing butterfly valves without removing the valves. Mechanical valve operators will be designed to restrict the rate of closure so that water hammer will not occur in the system in which the valve is installed. A typical butterfly valve is shown in figure 5-2.

c. Ball valves. Ball valves have the advantage of ease of operation, reliability, durability, and capability of withstanding high pressures, but are usually expensive. A typical small-diameter ball valve is shown in figure 5-2.

d. Plug valves. Lubricated and eccentric plug valves are the types of plug valves commonly used. Lubricated plug valves normally have a cylindrical

Table 5-1. Valve applications and standards.

Type	Applications	Sizes to be Used (diameter, inches)	Standard
Gate	Sectionalizing distribution mains. Isolating fire-hydrant branches.	3 or larger	AWWA C500, Standard for Gate Valves - 3 in. through 48 in. - For Water and Other Liquids.
Butterfly, rubber seated	Mains with water pressures less than 150 lb/in^2.	3 or larger	AWWA C504, Standard for Rubber-seated Butterfly Valves.
Ball	Applications involving throttling or frequent operation. Water service lines.	6 or less	AWWA C507, Standard for Ball Valves, Shaft - or Trunnion Mounted - 6 in. through 48 in. - For Water Pressures up to 300 psi.
Plug	Applications involving throttling or frequent operation. Water service lines.	6 or less	
Globe	Throttling operations. Water service lines.	2 or less	

USF200011017

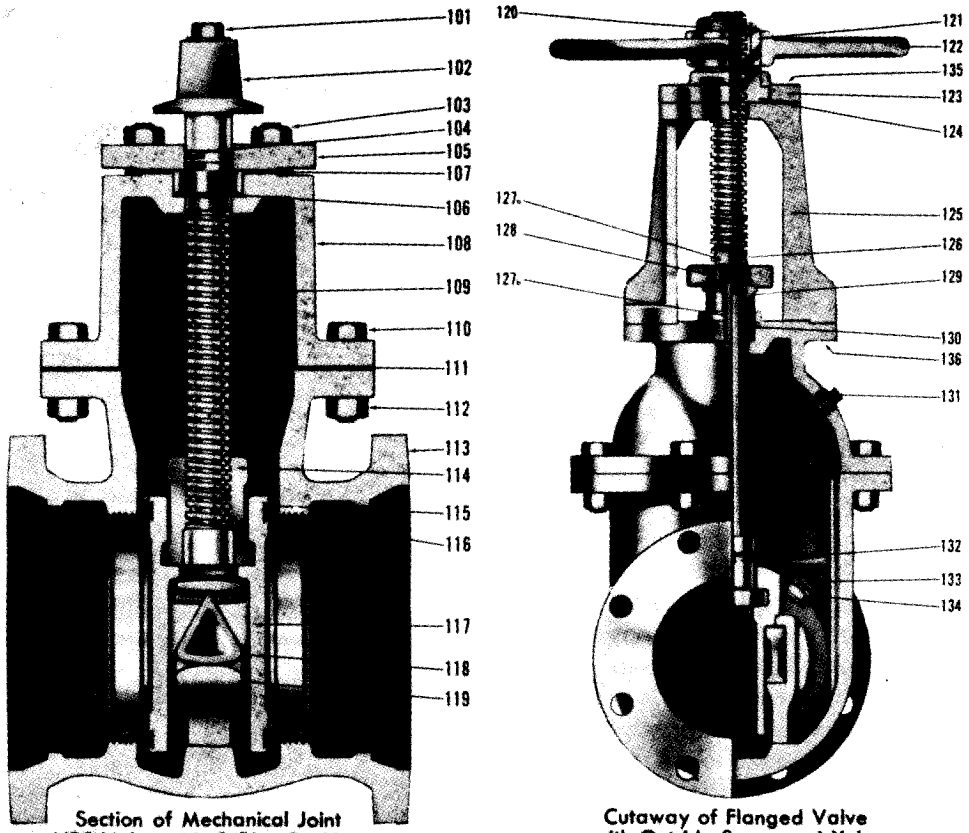

Section of Mechanical Joint NRS Valve with O-Ring Packing

Cutaway of Flanged Valve with Outside Screw and Yoke

	Part	No.	Material
101	Cap Screw	1	Steel
102	Operating Nut	1	Cast Iron
103	O-Ring Plate Bolts & Nuts		Steel
104	O-Rings	2	Rubber
105	O-Ring Plate	1	Cast Iron
106	Low Torque Bearing	1	
107	Stuffing Box Gasket	1	
108	Cover	1	Cast Iron
109	Non-rising Stem	1	Bronze
110	Neck Flange Bolts		Steel—Rust-proofed
111	Neck Flange Gasket	1	Composition
112	Neck Flange Bolt Nuts		Steel
113	Body	1	Cast Iron
114	Gate Nut	1	Bronze
115	Gate Ring	2	Bronze
116	Case Ring	2	Bronze
117	Gate	2	Cast Iron
118	Wedge	2	Bronze
119	Hook	2	Cast Iron
120	Hold Down Nut	1	Bronze
121	Handwheel Key	1	Steel
122	Handwheel	1	Cast Iron
123	O.S.&Y. Retainer Plate	1	Cast Iron
124	O.S.&Y. Stem Nut	1	Bronze
125	O.S.&Y. Yoke	1	Cast Iron
126	Rising Stem	1	Stainless Steel
127a	Follower Nuts	2	Bronze
127b	Follower Studs	2	Steel—Rust-proofed
128	Follower Plate	1	Cast Iron
129	Follower Gland	1	Bronze
130	Packing		Braided Asbestos
131	Test Plug	1	Teflon-coated steel
132	Stem Nut Pin	1	Bronze
133	Pegs	4	Bronze or Nylon
134	Straps	2	Stainless
135	O.S.&Y. R.P. Cap Screws		Steel—Rust-proofed
136	O.S.&Y. Yoke Bolts & Nuts		Steel—Rust-proofed

Figure 5-1. Double disc gate valve.

USF200011018

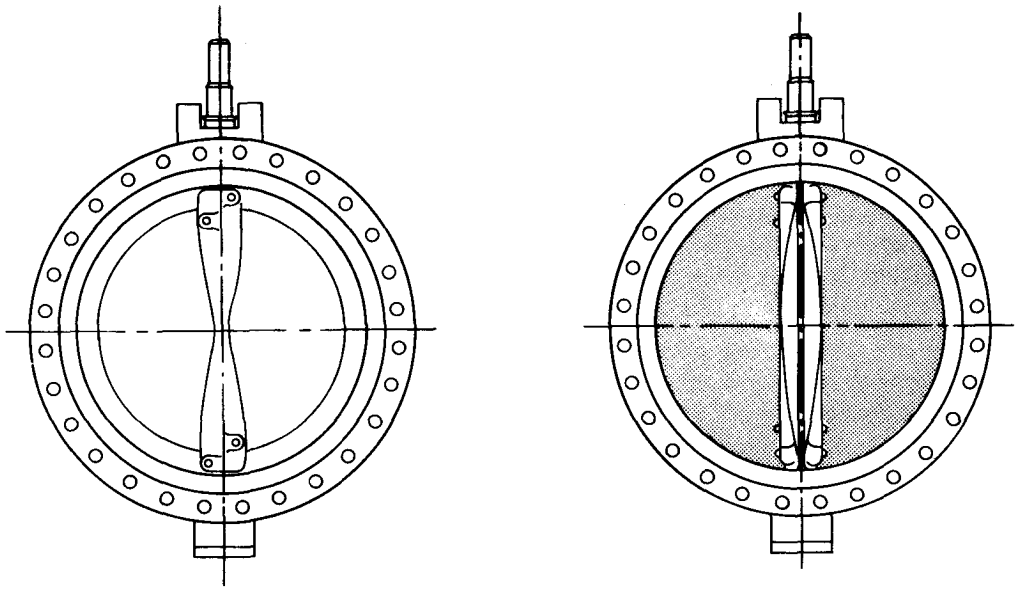

(A) TYPICAL BUTTERFLY VALVE

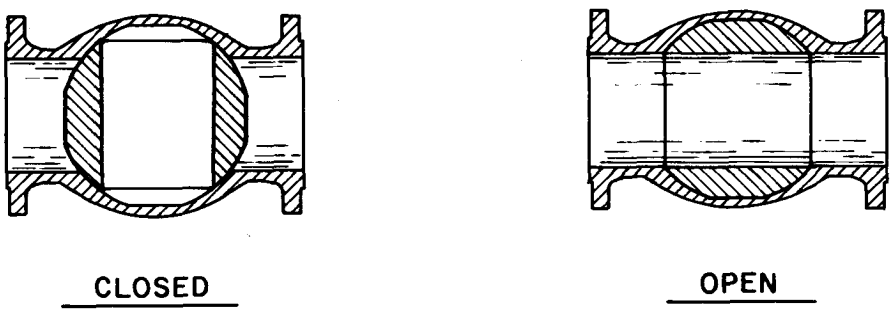

(B) TYPICAL SMALL-DIAMETER BALL VALVE

Figure 5-2. (A) Typical butterfly valve and (B) Typical small-diameter ball valve.

USF200011019

or tapered plug intersecting the flow with a rectangular port opening. Round ports can be obtained in the smaller sizes. Specially formulated greases are used both for lubrication and sealing of lubricated plug valves. When operated periodically, these valves are relatively easy to operate and provide a tight shutoff, but the plugs may freeze if not operated for a long period of time. Plug valves are especially good for high pressure applications. Eccentric plug valves are preferable to lubricated plug requirements; eccentric plug valves are also less prone to freeze. Ball and plug valves will not be used on buried pipelines, except when installed in a valve pit. The basic application for the eccentric plug valves are normally on small service lines.

e. Globe valves. Globe valves are particularly well suited to throttling operations and most plumbing fixtures are normally equipped with these valves. Small globe valves normally have rubberized discs and metal seats to provide driptight shutoff, but special discs and seats are available for more severe conditions; and may be used on water service lines 2 inches or less in diameter.

f. Check valves. Any valve used to prevent the reversal of flow is considered a check valve. Most check valves are equipped with plugs or hinged discs which close flow openings when flow is reversed. Rapid and complete valve closing is often ensured by the addition of special weights or springs to the plugs or discs. A newer type of check valve has spring-loaded, wafer-style, semicircular plates mounted on a vertical pivot through a flow port. The springs cause the plates to swing closed at the instant of flow reversal. This wafer-style check valve has the disadvantage of producing relatively high head losses and of showing excessive wear under some operating conditions.

g. Air release and vacuum relief valves. Air release valves are required to evacuate air from the main at high points in the line when it is filled with water, and to allow the discharge of air accumulated under pressure. Excess air allowed to accumulate at high points creates a resistance to flow, and an increase in pumping power requirements results. Vacuum relief valves are needed to permit air to enter a line when it is being emptied of water or subjected to vacuum. Special valves and vacuum relief valves should be installed at high points in the line or where a long line changes slope.

h. Valve location.

(1) *Shutoff valves.* The purpose of installing shutoff valves in water mains at various locations within the distribution system is to allow sections of the system to be taken out of service for repairs or maintenance without significantly curtailing service over large areas. Valves should be installed at intervals not greater than 5,000 feet in long supply lines, and 1,200 feet in main distribution loops or feeders. All branch mains connecting to feeder mains or feeder loops should be valved as closely to the feeders as practicable so that the branch mains can be taken out of service without interrupting the supply to other locations. In the areas of greatest water demand, or where the dependability of the distribution system is particularly important, maximum valve spacing of 500 feet may be appropriate. At intersections of distribution mains, the number of valves required will normally be one less than the number of radiating mains; the one valve will be omitted from the line which principally supplies flow to the intersection. Valves are not usually installed on branches serving fire hydrants on military installations. As far as practicable, shutoff valves should be installed in standardized locations (e.g., the northeast corner of intersections or a certain distance from the centerline of streets) so they can easily be found in emergencies. For large shutoff valves (approximately 30-inch diameter and larger), it may be necessary to surround the valve operator or entire valve with a vault to allow for repair or replacement. In important installations and for deep pipe cover, pipe entrance access manholes should be provided so that valve internal parts can be serviced. If valve vaults or access manholes are not provided, all buried valves, regardless of size, should be installed with special valve boxes over the operating nut in order to permit operation from ground level by the insertion of a special long wrench into the box.

(2) *Blowoff valves.* Blowoff valves or fire hydrants should be installed at the ends of dead-end mains to allow periodic flushing of the mains. Primary feeder mains and larger distribution mains should have a blowoff valve in each valved section which should be installed at low points in the mains where the flushing water can be readily discharged to natural drainage channels. Blowoff valves must be designed so that operation which will result in erosion or destruction of wildlife is not permitted. Special care must be taken to eliminate the possibility of contaminated water entering the distribution system through blowoff valves which have not been tightly closed.

5-2. Fire hydrants.

a. Types of fire hydrants.

(1) *Dry- and wet-barrel hydrants.* The most common types of fire hydrants are the dry- and wet-barrel varieties. They are similar in configuration

USF200011020

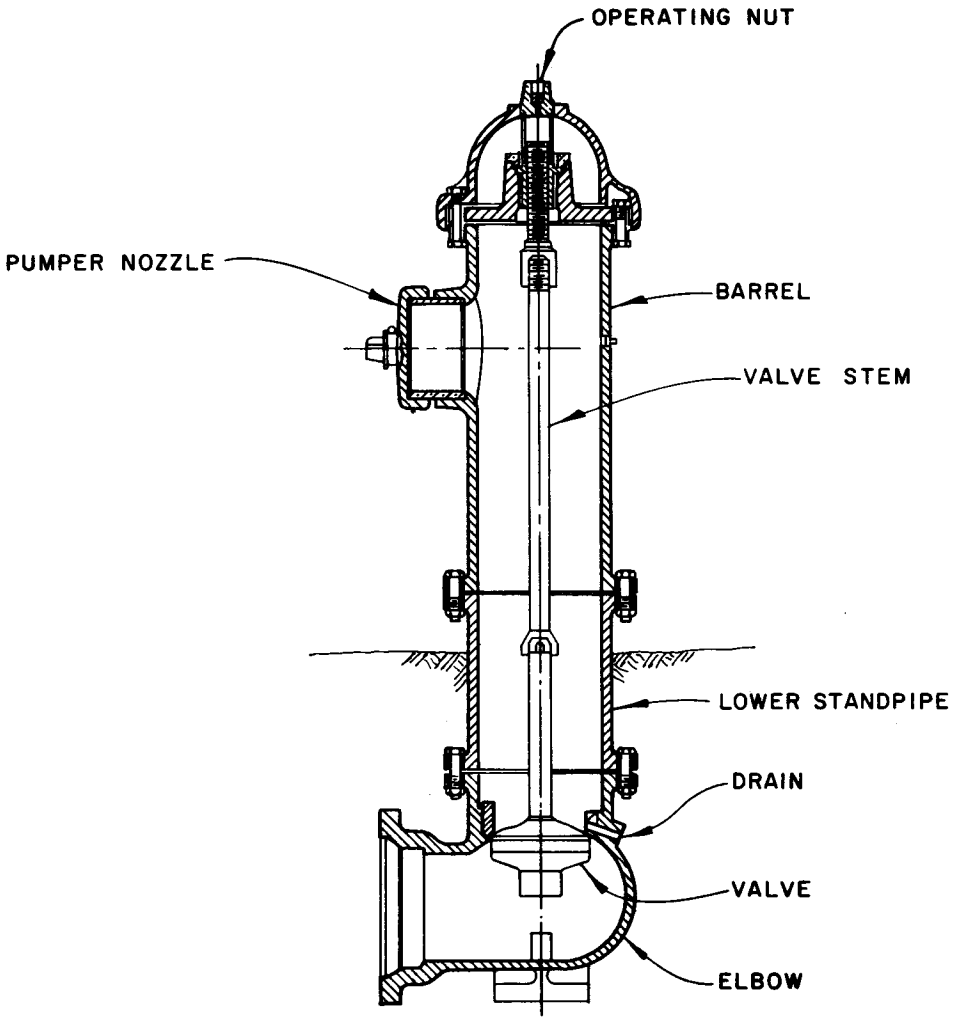

SCHEMATIC OF TYPICAL
DRY-BARREL FIRE HYDRANT

Figure 5-3. Schematic of typical dry-barrel fire hydrant.

USF200011021

and operation, but in the dry-barrel hydrant (AWWA C502), provision is made for draining water from the barrel after the hydrant is shut off. This is normally accomplished by gravity drainage through special drain outlets in the base or barrel of the fire hydrant. A dry-barrle hydrant is shown in figure 5-3. Wet-barrel hydrants (AWWA C503) can be used in areas where the temperature is always above freezing.

(2) *Safety hydrants.* Barrel-type hydrants extending aboveground are available in models which could be damaged by automobiles or trucks without disturbing the main valve. These are the safety or traffic fire hydrants and should be used near heavily traveled roads or intersections where adequate protection of the hydrant cannot be provided.

(3) *Flush-top hydrants.* In cases where the barrel-type aboveground hydrant would interfere with normal traffic, a flush-top hydrant can be utilized. The operating nut and hose nozzles in this type hydrant are located in a cast-iron box below ground level. The top of the box has a horizontal lid which is flush with the adjacent ground surface. However, flush-top hydrants are more difficult to locate than barrel-type hydrants, especially in areas subject to heavy snows, and once located are awkward to uncover and put into operation. Barrel-type hydrants are preferable to flush-top hydrants. Hydrants of all types should have the direction to open shown on their operators.

b. Hydrant nozzles. Nozzles on fire hydrants are either 2-1/2 or 4-1/2 inches in diameter. The 2-1/2 inch nozzle is for direct connection to fire hoses and the 4-1/2 inch nozzle is for use with mobile fire pumper units. Unless unusual conditions dictate otherwise, hydrants with two fire hose nozzles and one pumper nozzle should be used. The outlet nozzles on most hydrants are located at 90-degree angles to each other. The pumper outlet should normally face the street or intersection, and the two fire hose nozzles should face opposite directions, 90 degrees from the pumper nozzle. Hydrants with either more or less than three nozzles should be alined so that the nozzles are readily accessible from the street. Screw threads on hydrant nozzles should comply with the provisions of National Fire Protection Association (NFPA) 1963.

c. Hydrant spacing.

(1) *General.* Hydrant distributions will conform to the standards shown in table 5-2. Hydrant spacings must also conform to the guidelines given in AFM 88-10, Chapter 6 for Air Force applications and MIL-HDBK-1008 for Army applications.

Table 5-2. Hydrant distribution.

Required Fire Flow, gpm	Average Area per Hydrant, square feet
1,000 or less	160,000
1,500	150,000
2,000	140,000
2,500	130,000
3,000	120,000
3,500	110,000
4,000	100,000
4,500	95,000
5,000	90,000
5,500	85,000
6,000	80,000
6,500	75,000
7,000	70,000
7,500	65,000
8,000	60,000
8,500	57,500
9,000	55,000
10,000	50,000
11,000	45,000
12,000	40,000

(2) *Residential areas.* The preferred location for fire hydrants in residential areas is at street intersections. Where additional hydrants are required because of the above hydrant distributions, these additional hydrants will normally be located adjacent to streets approximately halfway between intersections. Each single or duplex family unit will have at least one hydrant within 300 feet and a second hydrant within 500 feet.

(3) *Airfields.* For airfield hangar areas, hydrants will be spaced approximately 300 feet apart, and where economically feasible will be connected to the base distribution system and not to the special system serving deluge sprinkler systems in the hangars. At Air Force double-cantilever hangar areas, hydrants will be connected only to the Base water distribution systen. For aircraft fueling, mass parking, servicing, and maintenance areas, the fire hydrants will be installed along the edge of aircraft

USF200011022

parking and servicing aprons. Hydrants will be spaced approximately 300 feet apart so that every part of the apron may be reached by approximately 500 feet of hose. Hydrants so located are not a hazard to moving aircraft, and no waiver of the provisions of AFR 86-5 is required. One or more hydrants will be located within 300 feet of all operational service points.

(4) *Individually sited buildings.* Where an adequately sized water main is available, or can be made available for an individually sited building such as a Reserve Center, two hydrants will be installed. However, one hydrant at the site is acceptable if the provision of a second hydrant would require extension of a water main beyond the point necessary to serve the domestic demands of the building.

(5) *Remote fuel storage areas.* Fuel storage facilities that are remotely located with relation to public or military installation water systems will generally not have fire hydrant protection. However, where the facility is of a critical nature or is of a high strategic or monetary value that would justify some degree of fire protection, appropriate recommendations will be furnished with necessary supporting information to HQDA (DAEN-ECE-G), WASH DC 20314-1000 or HQ USAF/LEEEU, Washington, D.C. 20332 for consideration.

d. Hydrant location.

(1) Proper clearance should be maintained between hydrants and poles, buildings, or other obstructions so that hose lines can be readily attached and extended. Generally, hydrants will be located at least 50 feet from the buildings protected and in no case will hydrants be located closer than 25 feet to a building, except where building walls are blank firewalls. Hydrants may be located adjacent to blank portions of substantial masonry walls where the chance of falling walls is remote.

(2) Street intersections are preferred location for fire hydrants because fire hoses can then be laid along any of the radiating streets. However, the likelihood of vehicular damage to hydrants is greatest at intersections, so the hydrants must be carefully located to reduce the possibility of damage. Hydrants should not be located less than 6 feet from the edge of a paved roadway surface, nor more than 7 feet. If hydrants are located more than 7 feet from the dege of the paved roadway surface and if the shoulders are such that the pumper cannot be placed within 7 feet of the hydrant, consideration may be given to stabilizing or surfacing a portion of wide shoulders adjacent to hydrants to permit the connection of the hydrant and pumper with a single 10-foot length of suction hose. In exceptional circumstances, it may not be practical to meet these criteria, and hydrants may be located to permit connection to the pumper using two lengths of suction hose (a distance not to exceed 16 feet).

(3) Hydrants should not be placed closer than 3 feet to any obstruction nor in front of any entranceways. The center of the lower outlet should not be less than 18 inches above the surrounding grade and the operating nut should not be more than 4 feet above the surrounding grade.

(4) In aircraft fueling, mass parking, servicing, and maintenance areas, the tops of hydrants will not be higher than 24 inches above the ground with the center of lowest outlet not less than 18 inches above the ground. The pumper nozzle will face the nearest roadway.

e. Hydrant installation. Many problems of hydrant operation and maintenance can be avoided if the hydrant is properly installed. All hydrants should be installed on firm footings such as stone slabs or concrete bases to prevent settling and strains on line joints. Separation of the pipe joints in the elbow beneath the hydrant is sometimes a problem because of forces created by the water pressure across the joint through the elbow. This problem can be alleviated by placing thrust blocks between the elbow and supporting undisturbed soil, or by tying the joint.

f. Hydrant markings. All hydrants at military installations will be marked in accordance with NFPA 291.

5-3. Water pipe materials.

a. Types of materials. Water distribution pipes are available in a variety of materials. Those most commonly used, and most suitable for use at military installations, are asbestos-cement, ductile iron, reinforced and prestressed concrete, steel, and plastic. All water mains and service lines should be designed for a minimum normal internal working pressure of 150 psig plus appropriate allowances for water hammer. External stresses due to earthfill and superimposed loadings will be calculated in accordance with the applicable standards of the American Water Works Association for each kind of pipe (app A). In areas classified as seismic zone 2 or higher, in accordance with TM 5-809-10/AFM 88-3, Chapter 13, pipes with flexible joints will be used. Asbestos-cement pipe, mechanical-joint cast-iron pipe, or rubber-gasket-joint pipe of various kinds (cast iron, steel, plastic, and reinforced concrete) may be used in these areas. The danger of earthquake damage can also be minimized if pipelines are laid in bedrock or coarse-grained sediments. Installation in fine-grained

USF200011023

sediments such as clay and silt should be avoided in earthquake-prone areas if possible.

b. Selection of materials.

(1) In selecting the material to be used for a particular application, the following items should be considered:

(*a*) Ability to withstand maximum anticipated internal pressures and external loads or the most severe combination thereof.

(*b*) Flow resistance of the pipe, both in new condition and after the pipe has been in service for several years.

(*c*) Ease of installation. This involves the unit weight of the pipe, type of joints used, type of bedding required, and whether or not thrust blocking is required.

(*d*) Resistance to external and internal corrosion.

(*e*) Joint tightness.

(*f*) Durability.

(*g*) Ease of tapping for service connections.

(*h*) Cost.

(2) Information on pipe diameter, design, and coatings, linings and fittings for various types of pipe is given in table 5-3 below.

c. Description of materials.

(1) Asbestos-cement pipe.

(*a*) This pipe is usually unaffected by corrosive soil conditions, and is installed in many locations where unprotected cast-iron or steel pipe would suffer excessive corrosion. Standard lengths of asbestos-cement pipe are 13 feet for pipe 8 inches or larger in diameter, and either 10 or 13 feet for pipe 4 or 6 inches in diameter. The three classes of asbestos-cement pipe are: class 100, class 150, and class 200 for pipe 4 inches through 16 inches and classes 30, 35, 40, etc., for pipe 18 inches through 42 inches. These refer to the maximum anticipated internal working pressure, not including sudden surges, to which the pipe is to be subjected. A factor of safety of 4.0 has been used in the design and manufacture of these pipes. They should theoretically be capable of withstanding internal bursting pressures of at least 400 psi (class 100), 600 psi (class 150), and 800 psi (class 200). Techniques for evaluating both internal and external loads are given in AWWA C401, and C403. External loads include both the weight of the backfill supported by the pipe and the weight of superimposed loads, static or dynamic on the pipe. A factor of safety of 2.5 is used in designing for external loads.

(*b*) Asbestos-cement pipe is also grouped into two categories according to the percentage of uncombined calcium hydroxide in the pipe. Type I has no limit on the uncombined calcium hydroxide; type II has 1.0 percent or less. Inasmuch as the uncombined calcium hydroxide may be leached from the walls of a pipe, thereby reducing the strength of the pipe, type II pipe should be used whenever the sum of the pH, the logarithm (base 10) of the alkalinity (in mg/1 as $CaCO_3$), and the logarithm (base 10) of the hardness (in mg/1 as $CaCO_3$), and the water in the pipe is less than 12.0 but greater than 10.0. Type II will be used in all Army and Air Force construction.

(*c*) Installation of asbestos-cement pipe will be in accordance with the provisions of AWWA C603. Direct tapping of asbestos-cement mains is permitted for service connections of 1-inch diameter or smaller. With the use of special service clamps, tapping for service connections up to 2 inches in diameter is permitted.

Table 5-3. Pipe type comparison

Pipe Type	Maximum Diameter (Inches)	Pipe Type	Coatings, Linings And Fittings
Steel	96	M11	C200 series
Ductile Iron	48	C150	C105 C100 series
Concrete	144	M9	C300 series
Asbestos-Cement	16	C401	
	42	C403	C400 series
Glass Fiber Reinforced	144	C950	C950
Polyvinyl Chloride	12	C900	C900

USF200011024

(2) *Ductile-iron pipe.* Ductile-iron pipe of equivalent thickeness is stronger, tougher, and more flexible than the now obsolete gray cast-iron pipe. The prescribed method of determining the required thicknesses of ductile-iron pipe is given in AWWA C150 (ANSI A21.50). Ductile iron shall be used in situations where some pipe deflection may occur, such as in earthquake-prone areas or in soil conditions where settling of the pipe may occur. Ductile-iron pipes are frequently lined with coal-tar enamel or cement mortar to reduce corrosion of interior surfaces (para 7-3). Cleaning and lining of corroded ductile-iron pipe can substantially reduce the head losses in the pipe; pipeline cleaning without lining is not permitted.

(3) *Concrete pipe.* Concrete pipe is strong, durable, corrosion-resistant, and has a smooth interior which allows high flow velocities with minimal head losses. Without special equipment or expertise, concrete pipe is more difficult to tap than cast iron and it should not be used where multiple future tapping for building service may be required. Three types of concrete pipe commonly available are: noncylinder, nonprestressed concrete pipe; nonprestressed concrete cylinder pipe; and prestressed concrete cylinder pipe. Concrete cylinder pipe has a steel cylinder either outside the concrete or embedded in the concrete of the pipe (See AWWA C300, C301 and C302).

(a) Noncylinder, nonprestressed concrete pipe. This pipe has both longitudinal and circumferential reinforcing bars cast in the concrete. It is not as strong as prestressed concrete pipe and should be used only if internal working pressures are not anticipated to exceed 55 pounds per square inch. Information on design and manufacturing parameters for this pipe are contained in AWWA C302.

(b) Nonprestressed concrete cylinder pipe. This pipe is most commonly used in diameters of 24 to 144 inches and lengths of 12, 16, or 20 feet. It is suitable for use when working pressures are less than 260 pounds per square inch. Each section of pipe consists of a welded steel cylinder encased in concrete, with longitudinal and circumferential reinforcing bars in the outer portion of the concrete. This pipe will conform to the requirements of AWWA C300.

(c) Prestressed concrete cylinder pipe. There are two types of prestressed concrete cylinder pipe available. They are the lined-cylinder type with concrete cast inside the steel cylinder, wire wrapped under tension around the steel cylinder, and a concrete or mortar covering over the wire and cylinder; and the embedded-cylinder type with the steel cylinder encased in concrete, wire wrapped on the outer concrete surface, and the wire covered with a coating of cement or mortar. Both types are characterized by high strength and relatively lightweight as compared to other kinds of concrete pipe. The lined-cylinder type is used for pressures up to 250 pounds per square inch and the embedded-cylinder type for pressures up to 350 pounds per square inch. Diameters of the pipes range from 16 to 48 inches for the lined-cylinder type and from 24 to 144 inches for the embedded-cylinder type. The design and manufacturer of both types of prestressed concrete cylinder pipes is covered in AWWA C301.

(d) Concrete pipe joints. Operating experience has shown that rubber-gasketed bell-and-spigot joints provide a long-lasting, water-tight seal when proper installation procedures are followed. Subsequent coating of the joint with mortar ensures watertightness. Other types of joints are also available and may be used.

(4) *Steel pipe.* The properties of steel pipe favoring its use are high strength, and ability to yield or deflect under a load while still resisting the load, the capability of bending without breaking, and the ability to resist shock. Like cast iron, steel pipe is susceptible to corrosion if effective coatings and linings are not applied and maintained. Corrosion products do not adhere to steel pipe and are continually sloughed off, thus allowing further corrosion. By contrast, corrosion products adhere to cast-iron pipe and offer some protection against further corrosion. Steel pipe is generally available in diameters ranging to 144 inches and greater. Maximum allowable working pressures depend on pipe wall thicknesses and may be selected for the entire range of waterworks applications using AWWA Manual of Practice Number 11. In designing steel pipe to withstand internal pressures, a factor of safety of 1.0 is generally used; a factor of safety of 1.5 or 2.0 is recommended in designing for external loads. Steel pipe may be used for transmission, distribution and service lines with adequate protective coatings, and linings and cathodic protection as determined necessary by site conditions. The design and manufacture of steel pipe 6 inches and larger and cast-iron pipe is given in AWWA C101 and C200.

(5) *Plastic pipe.*

(a) Several different types of plastic have been used in the manufacture of water distribution pipes. The most commonly used plastics include ABS (polymers of acrylonitrile, butadiene, and styrene), polyethylene (PE), and polyvinyl chloride (PVC). Inasmuch as PVC pipe is presently the most suitable type of plastic pipe for water distribution, it is the only type covered herein.

USF200011025

(*b*) The advantages of PVC pipe are that it has a very low resistance to flow, it is somewhat flexible and can deflect under earth or superimposed loadings, it does not corrode from electrical or microbial action, and it is relatively lightweight and easy to install. Disadvantages are that it suffers a permanent loss of tensile strength with time, and that the tensile strength of the pipe at any time is decreased by temperature increases. PVC pipe also undergoes significant expansions and contractions with temperature changes, necessitating the use of gasket couplers.

(*c*) PVC pipe is used in sizes of 4 to 12 inches inside diameter. It is available in pressure classes of 100, 150, and 200 pounds per square inch, which correspond to the maximum anticipated internal working pressure for the pipe. A factor of safety of approximately 3.0 is used in the design of PVC pipe for sustained internal pressures; and a factor of safety of 4.0 is used for sudden pressure surges. However, due to the loss of tensile strength with time, these factors of safety decrease correspondingly. Pipe conforming to AWWA C900 with elastomeric gasket bell and spigot joints in 4-inch diameter through 12-inch diameter size, is acceptable for transmission, distribution, and service lines. Transmission, distribution, and service lines less than 4-inch diameter will require schedule 80 pipe with threaded joints or schedule 40, SRD26, 21, 17 or 13.5 pipe with elastomeric-gasket bell joints. The use of plastic pipe should normally be included as an option for contractors bidding on installation of new piping systems.

(*d*) In addition to the above, refer to AFM 88-15 for use of plastic pipe on Air Force facilities.

(6) *Insulating couplings.* If pipes of dissimilar metals must be jointed, a suitable insulating coupling should be used for the joint to prevent galvanic corrosion.

USF200011026

CHAPTER 6

SERVICE CONNECTIONS

6-1. Tapping of water lines.

a. Asbestos-cement lines. Asbestos-cement pipe can be tapped either wet or dry using standard waterworks equipment. The largest size corporation stop which can be tapped directly into asbestos-cement pipe is one inch. Larger outlet sizes up to 2 inches can be secured by using service clamps or bossed sleeves. Tapping sleeves and valves can be used for making taps larger than 2 inches in asbestos-cement pipe under pressure.

b. Concrete lines. New service connections on existing concrete pipelines can be made with or without interruption of service. Concrete pipe is not necessarily more difficult to tap than other pipe materials; however, the cost of pressure tapping the pipeline is considerably greater than incorporating outlets for future connections during pipe manufacture. Fittings are available for making threaded connections from 1/2 to 2 inches in diameter for the various types of concrete pressure pipe. Flanged outlet taps can be made under pressure for branch lines with diameters as large as one size smaller than that of the pipe to be tapped. Step-by-step procedures for small and large pressure connections are available in most manufacturer's literature.

c. Steel lines. Service connections to steel pipe can be readily made with commercially available equipment. This includes service connections both dry and with pipe under internal pressure. Small service connections consist of threaded couplings welded to the steel pipe surface and drilled through with standard drilling equipment. Large diameter service connections are normally made under pressure utilizing a flanged service outlet, a tapping valve, and a standard drilling machine. The service outlet may be either a bolted-in-place service saddle or a fabricated steel service saddle that is welded to the pipe.

d. Plastic lines. Plastic pipe can be direct tapped wet or dry, using standard waterworks equipment, for insertion of corporation stops. However, a special tool has been developed which will minimize PVC shavings and retain the coupon. The largest size corporation stop which can be tapped directly into the pipe is one inch. AWWA thread recommended by these methods is 2 inches. Tapping sleeves and valves can be used for making large taps under pressure, size to size, i.e., 8-inch outlet in 8-inch pipe, etc. Tapping sleeves should be assembled in accordance with the manufacturer's directions.

6-2. Service connection materials.

a. Copper. Copper has been the most widely used material for service piping due to its flexibility, ease of installation, corrosion-resistance, and the capability to withstand high pressure. Although the cost of copper pipe has risen rapidly in recent years, it is still well suited for service connection use.

b. Plastic. Plastic pipe is frequently selected because of its relatively low cost and easy installation. The capabilities of plastic pipe to withstand maximum internal and external loadings and temperatures should be carefully examined before use.

c. Galvanized steel. Galvanized steel pipe has been used for service connections for many years. The main advantage of galvanized steel pipe is its relatively low cost. However, since galvanized steel pipe is rigid and requires threading, it is not easily installed. Also, galvanized steel service connections may have relatively short lives if placed in soils in which corrosion is likely to occur, or if used to carry waters having a negative Langelier index (TM 5-813-3/AFM 88-10, Volume 3). Galvanized steel pipe is generally not used for 2-inch or larger service connections.

d. Other materials. Ductile-iron and asbestos-cement pipes are not generally available in the small sizes required for most service connections, but could be considered for service connections to large water users for which pipe sizes of 3 inches or larger are needed.

6-3. Sizes. The size of the service connection needed in any particular situation should be the minimum size through which water can flow at the maximum required rate without excessive velocity or head loss. A maximum velocity of 10 feet per second is commonly used. In general, head losses through service connections during maximum flows should be small enough to ensure that a residual pressure of 25 pounds per square inch is available for water distribution within the plumbing of each building.

USF200011027

Head losses of 15 pounds per square inch or greater through service connections are considered excessive, even if the 25-psi residual criterion can be met. Although 1/2-inch service connections can be used for facilities requiring very small flows, the minimum size for most installations should be 3/4 inch.

6-4. Installation. Service connection will be installed in as direct a path as possible from the distribution main to the building served, and will enter the building on the side closest to the distribution main. Service connections will be installed below the frost depth. If the size and wall thickness of the main are adequate, smaller service lines may be connected to the main by direct drilling and tapping. This can be accomplished with special machines while maintaining water pressure in the main. Larger service connections (greater than 2 inch) may necessitate the installation of tees or special branch connections into distribution mains, but may be made with the main under pressure with a tapping machine, tapping valve, and sleeve in most cases.

6-5. Service connections at airfields. Water-service connections are required for servicing aircraft at airfields. These connections will be located adjacent to the parking apron at nondispersed stations or adjacent to the servicing apron at dispersed stations.

USF200011028

CHAPTER 7

DISTRIBUTION SYSTEM DESIGN

7-1. Minimum pipe cover. Minimum cover over pipes will be 2 1/2 feet in grassed areas, 3 feet under unpaved driveways or roadways, and 4 feet under railroad tracks. Where frost depths are greater than the above minimums, the cover should be at least equal to the frost depth, particularly for small lines which may not be flowing continuously. Where lines pass under railroads, pipes may be encased in concrete or enclosed in rigid conduit in accordance with the standard practice of the affected railroad or with the criteria contained in Chapter 1, Part 5 of the American Railway Engineering Association's Manual for Railway Engineering. Installation of pipelines and conduits under railroad main lines is usually accomplished by carefully controlled tunneling and jacking. For branch lines or lines used infrequently, open cut installation may be permitted by the railroad. Jacking or tunneling procedures are usually required if a pipeline is to be installed under a major roadway with no disruption of traffic.

7-2. Protection of items penetrating frost zone. Water distribution equipment items penetrating the frost zone are sometimes subject to freezing if protective measures aren't taken. Air vent and vacuum relief valves, blowoff valves, or fire hydrants are particularly susceptible. Freezing should not be a problem with post-indicator valves and valve boxes if they are constructed and maintained so that water doesn't collect in or around them.

a. Air vent and vacuum relief valves. These items can be protected from freezing by installation in pits deep enough to place the valves below the frost zone or by providing heat with electric space heaters, electric heating tape, or other suitable means.

b. Blowoff valves. Blowoff valves should be installed at depths below the frost zone. If terrain conditions permit, the drain line from a blowoff valve should go to a nearby low surface area to allow gravity drainage. The valve discharge must be piped to the atmosphere and drainage provided from the line to the outlet side of the valve. If gravity drainage can't be provided, the blowoff valve should be provided a tee, with foot valve to prevent backflow, discharging into a dry well below the frost line. Alternatives permitting drainage without contamination from ground water or other nonpotable water may be used subject to approval of the Contracting Officer.

c. Fire hydrants. Fire hydrants penetrating the frost zone will be of the dry-barrel variety (para 5-2). Free draining backfill will be placed around the barrel to prevent frost-heave due to moisture around the barrel in the frost zone.

7-3. Cleaning and lining existing water mains.

a. Where incrustations and tubercules have formed on the inside of mains to such a degree that flow through the mains has been materially reduced, it may be advantageous to clean and line these mains. Cleaning is usually accomplished with special mechanical scraping devices which are pulled through the main with a cable or forced through the main by hydraulic pressure. Large mains, over 30 inches, can be cleaned by electrically-driven, manually-operated machines with rotating scraper blades.

b. After a distribution main has been cleaned, it must be lined with cement mortar or a similar substance. The lining is applied by a special machine on wheels which is pulled through the main and fed the viscuous lining substance under pressure. The lining is centrifugally sprayed onto the interior walls of the pipe by the machine, and the finish is smoothed by special mechanized trowels. The applied linings generally vary in thickness from 3/16 to 1/4 inch, but as little as 1/8 inch might be applied to small diameter mains. In places where the lining cannot be applied and troweled by machine, hand application is necessary. During the cleaning and lining of mains, precautions must be taken to protect any valves, hydrants, or branch mains attached to the main being treated.

c. The principal advantages of cleaning and lining of old mains are that the frictional resistance to flow is reduced, thereby increasing flows and pressures; and the resistance of the pipe material to corrosion is improved. However, before a program of main cleaning and relining is initiated, the relative cost and service life must be compared to the complete replacement of deteriorated mains, and the most cost-effective alternative selected. Standards for

USF200011029

the performance of this work are given in AWWA C602.

7-4. Disinfection of water supply system. Disinfection of new distribution mains and disinfection of existing distribution piping affected by construction, or system modifications by construction contract will be in accordance with AWWA C601. In no event will any of the above piping be placed in service prior to verification of disinfection by bacteriological tests as required and evaluated by the supporting medical (health) authority.

7-5. External corrosion.

a. Corrosion of the external surfaces of cast-iron or steel pipes can, under some conditions, be a significant problem. Therefore, ductile-iron or steel pipelines placed in corrosive soils must be protected by coatings of coal-tar or cement mortar. Standards for coal-tar coatings are given in AWWA C203 and AWWA C209. Cement mortar coatings may be applied by mechanical or pneumatic means and should meet the guidelines in AWWA C205.

b. The characteristics of the soil in which a pipe is placed affect the rates of corrosion, with the most corrosive soils being those having poor aeration and high values for acidity, electrical conductivity, dissolved solids, and moisture content. The relative potential for corrosion may be estimated by evaluating the degree of corrosion of pipelines or other metallic objects previously buried in that soil. When this information is not available, resistivity tests of the soil should be conducted as described in chapter 8 of TM 5-811-4/AFM 88-p45 and results evaluated in accordance with paragraph 3-05d therein to determine the required degree of cathodic protection, or restrictions on piping materials permitted to be used.

c. In locations where the soils are known to be very corrosive, it may be desirable to use cathodic protection systems as a supplement to (but not in place of) the above coatings. Requirements for corrosion control and criteria for cathodic protection of buried utilities and structures are given in TM 5-811-4/AFM 88-45. Additional criteria is given in AFM 88-15.

d. Another method of avoiding corrosion of distribution mains is through the use of nonmetallic pipe materials such as asbestos-cement, reinforced concrete, or plastic.

7-6. Thrust blocking. Criteria for determining the magnitudes of thrusts and the relative need for thrust blocking or anchorage are given in appendix C.

7-7. Standard details. Construction details are shown on OCE Standard drawing No. 40-07-22. This drawing is available at HQDA(DAEN-ECE-A) WASH DC 20314-1000.

7-8. Layout map. An up-to-date layout map, to a suitable scale, showing the entire distribution system involved in the design will be maintained.

7-9. Design analysis. The design analysis will indicate the essential elements used in determining sizes and locations of mains, including:

Projected populations and areas in which the populations are located

Locations and magnitudes of special water demands

Location and magnitude of fire demands

Location and size of pump stations
Storage input

Water treatment plant or other input sources

USF200011030

CHAPTER 8

TRANSMISSION LINE DESIGN

8-1. General. This chapter includes procedures specifically related to transmission lines of 12 inches diameter and larger. Service connections are usually not permitted. Interconnections with the distribution system piping should be held to a minimum and are usually over 1,000 feet apart.

8-2. Design procedures. Transmission line design shall include the following procedures.

a. Layout. The new line will be designed to fall within existing utility or street right-of-way where available. The price of acquiring easements through private property must be considered as part of the alternative cost analysis. Easements must be wide enough to allow for initial construction and future maintenance. Installation close to physical features, such as buildings or other utilities, which would cause construction problems or future access problems for maintenance should be avoided. A set of plan and profile drawings shall be prepared which shall show as a minimum the following information:

(1) Survey base line with physical control points.

(2) Easements, rights-of-way, streets, and construction limits, etc.

(3) Existing physical features such as buildings, fences, structures, utilities, trees and drainage systems.

(4) Existing, and proposed if applicable, ground elevations along the centerline of the pipe shall be shown on the profile.

(5) In plan, the proposed pipeline and its relationship to the survey base line.

(6) In profile, the centerline elevation of the proposed pipeline.

(7) Beginning and ending points of the pipeline and all appurtenances.

(8) Construction details of the pipeline, connections, appurtenances, tunneling, bedding and surface restoration, etc. Typical information shown on plan and profile drawings is illustrated in figure 8-1.

b. Diameter vs pumping costs. Pump costs are dependent upon initial cost and horsepower requirements. The total dynamic head of the system is the sum of the suction lift, discharge head, friction head and velocity head, and is represented by the following equation:

$$TDH = H_S + H_D + H_F + \frac{V^2}{2g} \qquad \text{(eq 8-1)}$$

where: TDH = total dynamic head

H_S = suction lift

H_D = discharge head

H_F = friction head

$\frac{V^2}{2g}$ = velocity head

The most economical pipe diameter in a pumped system is determined by comparing pumping costs for various sizes of pipe. Only standard pipeline sizes should be considered. In order to hold friction losses to a minimum and to reduce the possibility of severe waterhammer, the diameter should be sized so that the velocity is 4 feet per second (fps) or less. Under special circumstances when approved by the appropriate authority, the maximum design velocity may exceed 4 fps.

c. Hydraulic calculations. The Hazen-Williams formula is often used to compute flow characteristics. Also, the Darcy-Weisbach equation is used in some computer programs. Depending on requirements, one of the following forms of the Hazen-Williams equation is used:

$$V = 0.55\, C\, D^{0.63}\, S^{0.54} \qquad \text{(eq 8-2)}$$

$$Q = 0.433\, C\, D^{2.63}\, S^{0.54} \qquad \text{(eq 8-3)}$$

$$S = \frac{2.32Q}{C\, D^{2.63}}\ 1.85 \qquad \text{(eq 8-4)}$$

$$V = 1.318\, C\, R^{0.63}\, S^{0.54} \qquad \text{(eq 8-5)}$$

where:

V = velocity of flow in feet per second

C = coefficient of roughness

D = diameter of pipe in feet

S = head loss in feet per foot of length

Q = flow in cubic feet per second

R = hydraulic radius in feet

USF200011031

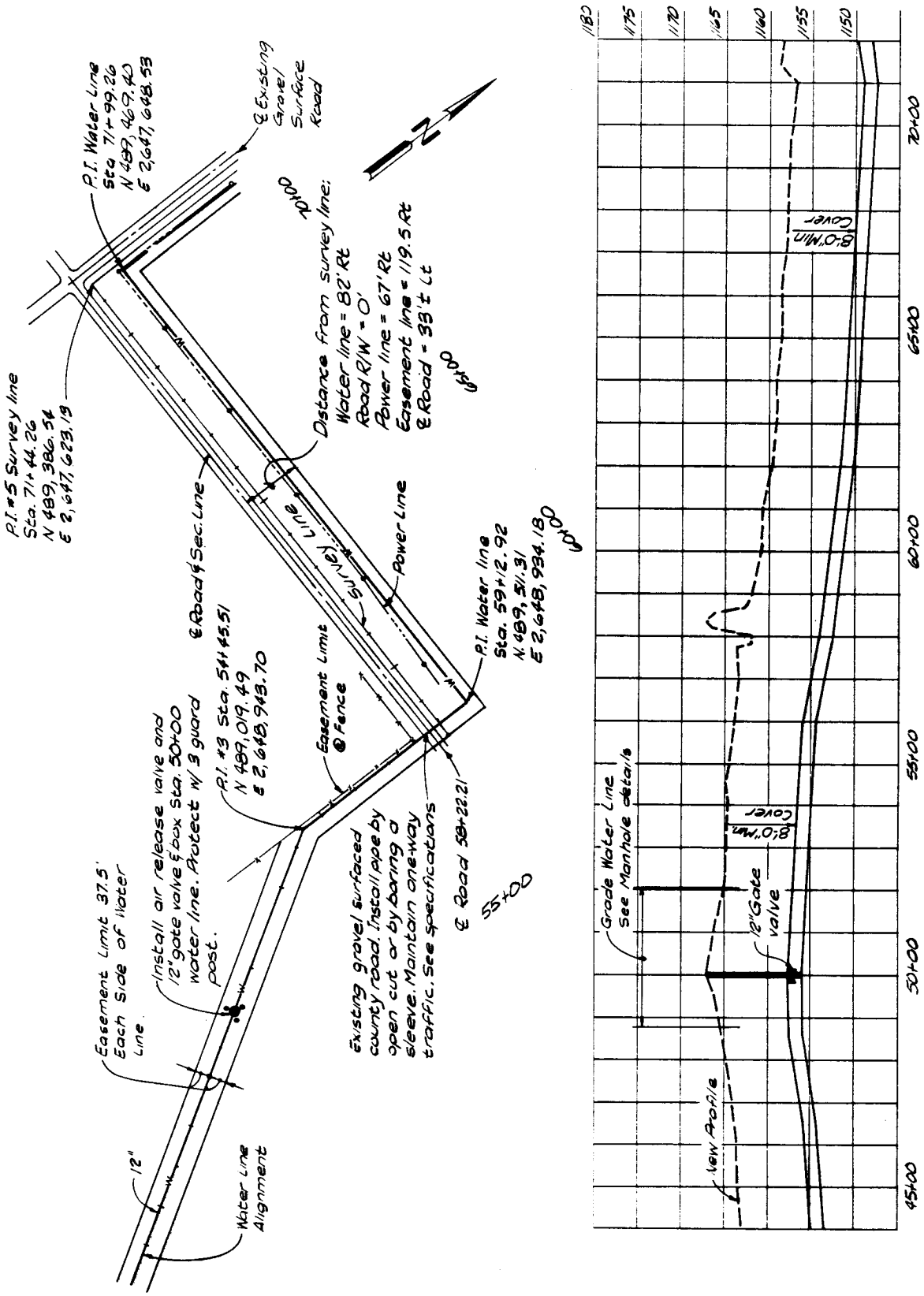

Figure 8-1. Typical plan and profile drawings.

USF200011032

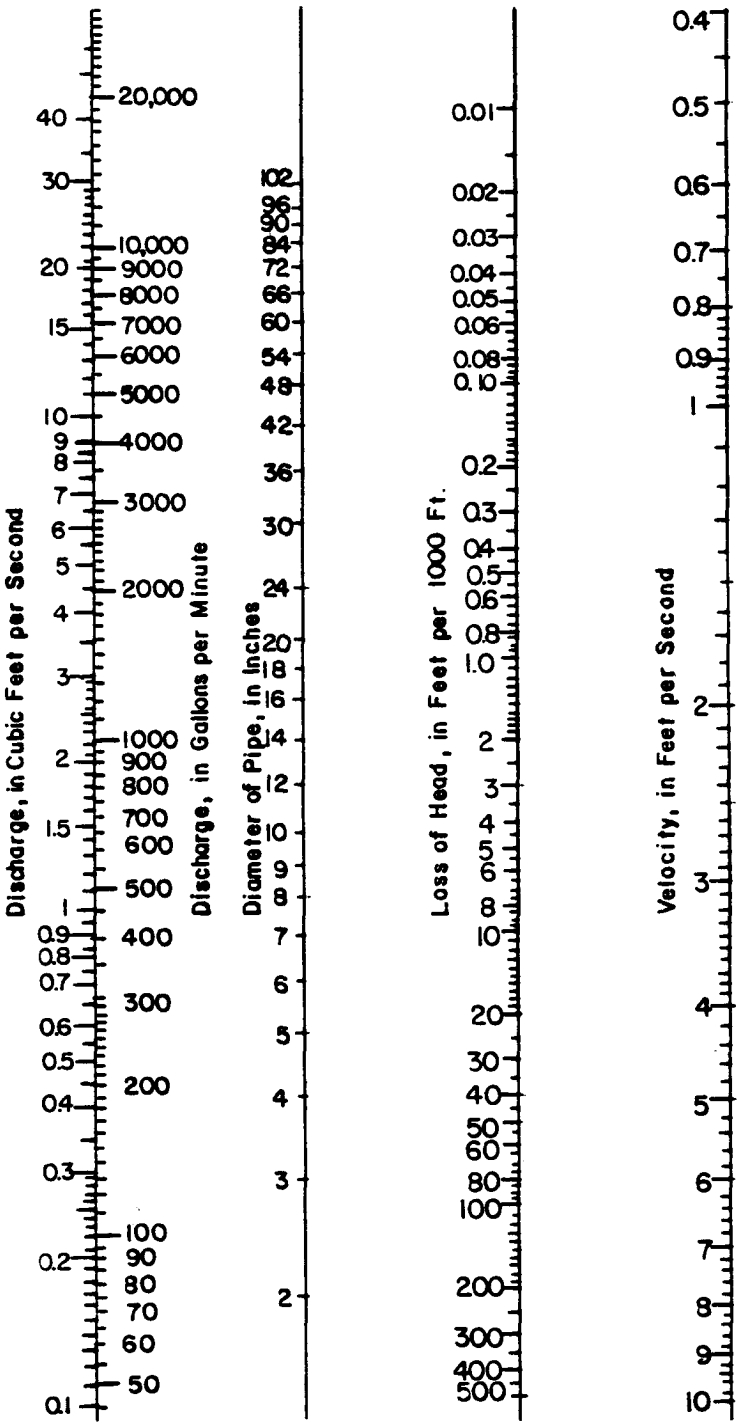

Figure 8-2. Nomograph for Hazen-Williams formula in which C = 100.

USF200011033

Values of C are 140 for smooth lined steel pipe, very smooth concrete pipe, cement lined ductile iron pipe and asbestos-cement pipe; 130 for ordinary ductile iron pipe in good condition; 110 to 120 for ductile or cast-iron pipe in service 5 to 10 years; 100 for older cast-iron pipe; and 40 to 80 for old cast-iron or steel pipe which is severely tuberculated or any pipe with heavy deposits. A quick solution for the equations may be found by use of the nomograph in figure 8-2. It is prepared from the Hazen-Williams formula by using C = 100. For larger or smaller values of C, the discharge or velocity obtained from the nomograph is multiplied by the ratio of the given value of C to 100. If the discharge or velocity is given, it should be multiplied by the ratio of 100 to the known value of C before the nomograph is used.

EXAMPLE 8-1. By using figure 8-2, determine the discharge, in cubic feet per second (cps), from a 12-inch pipe for which C = 120 when the loss of head is 5 feet per 1000 feet.

Solution: The discharge corresponding to the given diameter and loss of head for a value of C = 100 is found first. A straightedge passing through 12 on the diameter line and 5 on the loss-of-head line will intersect the discharge line at 2.5 cfs. Therefore, the discharge is:

$$2.5 \times \frac{120}{100} = 3.0 \text{ cfs}$$

EXAMPLE 8-2. A 30-inch pipe for which C = 130 is to discharge 10,000 gallons per minute (gpm). By using figure 8-2, find the loss of head per 1000 feet of pipe.

Solution: The first step is to determine the discharge that corresponds to a value of C = 100. This is 10,000 × 100/130 = 7,692 gpm. A straightedge through 30 on the diameter line and 7,692 on the discharge line intersects the loss-of-head line at 2.0 feet per 1000 feet.

Valves, bends, and other fittings in a pipeline and sudden enlargements or contractions cause loss of head. If a valve is partly closed, there is greater resistance to the flow and greater loss of head. Table 8-1 shows the loss in pipe fittings and appurtenances, expressed as equivalent lengths of straight pipe as a multiple of the diameter, due to various valves, fittings, contractions, and enlargements.

d. Internal pressure. The internal pressure is the difference in elevation between the conduit and the hydraulic grade line (HGL). The pressure at the beginning of a main may be generated by a pump, reservoir elevation or connection from another pipeline. Pressure losses are due to friction, bends and fittings, and changes in elevation. These are measured above a horizontal datum plane as shown on figure 8-3.

EXAMPLE 8-3. Assuming steady state conditions the pump in figure 8-3 delivers 5,000 gpm at a discharge pressure of 140 feet of head. The pipeline is 24-inch diameter, C = 100, and is 3,625 feet from pump to reservoir. Calculate the internal pressure at Station 20 + 00.

Solution: From figure 8-2, the head loss is found to be 2.7 feet per 1,000 feet. Assume other losses are neglible.

$h_L = 2 \times 2.7 = 5.4$ ft.

Elevation at pump =	230.0	
Discharge pressure =	+140.0	(60.0 psi)
Elevation of HGL at pump =	370.0	
Less h_L =	−5.4	
Elevation of HGL at Station 20 =	365.6	
Pipe Elevation =	−310.0	
Pressure =	55.6ft.	(24.1 psi)

e. Pipe materials. The materials allowed for use are steel, ductile iron, reinforced concrete, asbestos-cement, glass fiber reinforced and polyvinyl chloride pipe. Mains must be designed for the maximum internal working pressure plus an allowance for waterhammer. Design must include external stress due to earthfill and superimposed loads. Reductions in wall thickness at isolated regions of lower pressure or reduced external stress will not be made due to the possibility of construction personnel installing these sections in the wrong sections of the line. Pipe shall be designed and specified in accordance with applicable AWWA Standards, and specifically as indicated in table 5-3.

f. Anchorage and Expansion.

(1) Thrust restraint at bends and abrupt changes in direction is required. Certain types of pipe such as welded steel are designed as continuous conduits and some ductile iron joint systems are designed as restrained joints which may not require thrust blocking. When required, thrust restraint shall be designed in accordance with appendix C.

(2) Under empty conditions, lightweight conduit such as steel is bouyant and will float. This may occur if the water table is high enough even though the pipeline may be backfilled. If this is likely, the designer must add extra weight to the pipe. This

USF200011034

Table 8-1. Losses in pipe fittings and appurtenances

Description of Pipe Fitting or Appurtenances	Loss in Equivalent Length of Pipe Diameters (d)
Gate Valve	
3/4 Closed	900
1/2 Closed	160
1/4 Closed	35
Full Open	13
Angle Valve Open	170
Globe Valve Open	340
Swing Check Valve	80
Elbows	
90° Standard	
90° Long Radius	20
45° Standard	16
Tee Flow Through Run	20
Standard Tee Take-Off	75
Run of Tee Reduce One-Half	32
Sudden Contraction:*	
d/D = 0.25	15
d/D = 0.5	12
d/D = 0.75	7
Sudden Enlargement:*	
d/D = 0.25	32
d/D = 0.5	20
d/D = 0.75	19
Entrance to Basin	75

*For contractions and enlargements, d is diameter of smaller pipe and D is diameter of larger pipe; resistance is expressed in terms of d.

USF200011035

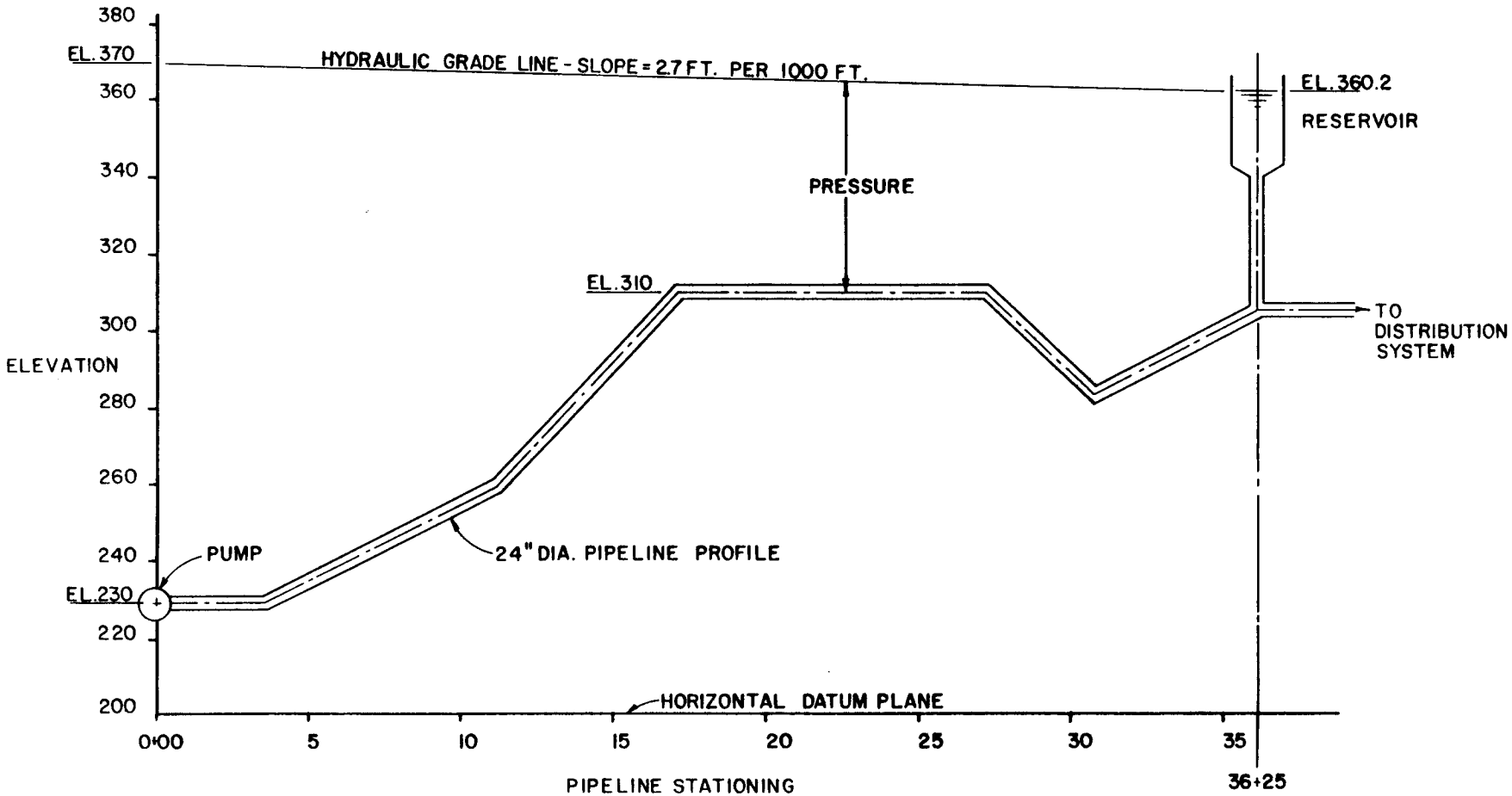

Figure 8-3. Illustration of pipeline pressure.

USF200011036

may be accomplished by the use of reinforced concrete collars, poured in place, and firmly anchored to the pipe.

(3) All pipe materials are subjected to expansion and contraction forces due to temperature changes. In colder climates, water temperature may vary from 32 degrees F. to over 80 degrees F., a range of over 50 degrees. Above ground installations, especially in hot temperature climates may also cause significant temperature variations. In bell and spigot joints, this effect usually may be neglected. However, the effects of expansion and contraction can be significant for long, straight, continuous pipelines. The designer shall include expansion joints designed for the pipe material and/or include appropriate stresses in the calculation for pipe wall thickness where required. However, it is not usually economical to increase the strength or thickness of the pipe wall as the sole means of resisting these stresses.

g. Valving. Sectionalizing valves are to be provided at all connections to the main. This includes pump discharge, distribution connections, fire hydrants, blowoffs, air valves and reservoir connections. Line valves are not usually required to be closer than one mile unless intermediate distribution connections are made. For larger size mains, the use of valves one standard size smaller than the pipeline is allowed as a cost-saving measure, provided that the velocity through the valve does not exceed 11 fps. Many large line valves have an integral by-pass arrangement. Valves may be the same as used in the distribution system, see paragraph 5-1. Valves shall be adequately designed for the actual internal pressure.

h. Air-vacuum valves. Air-release valves eliminate air pocket build up which causes a flow constriction and increased head loss. They are designed to expel air from a line during filling and close automatically when water reaches the valve. Vacuum valves are designed to allow air to enter the main when it is being drained. Also, vacuum valves are required to prevent the possible collapse of thin wall conduit which may be subject to a vacuum under certain conditions such as a break in the pipeline. Combination air release and vacuum valves are to be installed at the following locations:

(1) Peaks, where the pipe slope changes from positive to negative.

(2) Long relatively straight stretches at 1/4-to 1/2-mile intervals.

Air valves are to be sized to exhaust air at the pipe fill rate. Vacuum valves are to be designed to admit air at a rate equal to the flow generated by gravity. Consult manufacturer's literature for capacity and performance data. These valves are to be installed in pairs to prevent problems due to failure at one of the valves.

i. Blow-offs. Blow-offs, with a drain to a disposal area, should be installed near low points and other suitable locations to facilitate draining the conduit and disposal of the water. Blow-offs will be designed with an air-gap to prevent contaminated water from backing up into the main.

j. Hydrants. Hydrants for fire fighting purposes are not normally installed on transmission mains. If they are, design should be as specified in paragraph 5-2. Hydrants may be installed to facilitate filling and disinfection. For this purpose, a hydrant may be located adjacent to each line valve.

k. Access manholes. Manholes for access to the inside of large mains facilitate the construction and inspection of pipelines large enough to be entered by a workman. The minimum pipeline size is usually 20-inch diameter. They are useful if located adjacent to air valves, blow-offs, and line valves. Access manholes are to be designed as pipeline tees and fitted with a bolted blind flange.

l. Flow measurements. The design should allow for measurement of the volume of flow in the main. This may be done by pitot tube which requires the installation of a 1-inch corporation in the top of the main, or by a venturi installed as part of the pipeline or other commercially available equipment or methods. Sufficient straight pipe without flow interruption shall be provided ahead of and following the point of measurement as required by the manufacturer of the device.

m. External corrosion. The design, if the same as for distribution mains, refer to paragraph 7-5. Also use references cited in paragraph 8-2*e*.

n. Area restoration. Upon completion of the pipeline, the trench will be backfilled and compacted to prevent settlement. The surface will be brought to grade to match existing or design elevations. In previously grassy areas, the surface will be seeded or sodded. In paved or sidewalk areas, restoration shall match the original surface treatment as close as possible.

8-3. Filling procedures. Water should be admitted to the new transmission main at the lowest available point and be allowed to fill the pipe slowly up to higher elevations. Each section of main between line valves shall be filled separately and checked before proceeding to the next section. The progress of water in the pipeline shall be carefully and continuously monitored. It is usually neither feasible

USF200011037

nor necessary to begin the filling process prior to the completion of construction of the entire pipeline.

a. On mains longer than a few thousand feet, where it would be unwieldy to continuously refer to construction drawings, a special profile drawing may be prepared at a smaller scale; e.g., 1″ = 100′ or 1″ = 200′. This profile drawing should show pipeline stationing, all appurtenances and other major physical and design features.

b. Prior to commencement of filling operations, all blow-offs, access manholes, other appurtenances, and temporary construction feaures should be checked to make sure they are closed and sealed. Check to see that air-release valves are free of debris and the control valves are open. Fire hydrants may be opened for additional air release and flushing purposes.

c. The rate of fill shall be carefully monitored and controlled. Use of two-way radios is desirable on longer pipelines. The point of fill should be continuously manned and personnel should be prepared to close valves in the event of leaks or other problems.

d. Water may be admitted through line valves on smaller lines. On larger mains, hydrants, distribution connections, or bypass connections of 6-inch or 8-inch diameter should be used. In any case, the valves being used must be capable of being closed under the conditions of flow with full head on one side only.

e. Progress shall be monitored by checking air-release valves and flow from hydrants. Hydrants may be closed when full-barrel flow is achieved without pulsing or surging. Each appurtenance must be checked for leaks during the filling process.

f. The filling process does not have to be a 24-hour-around-the-clock operation. It can be stopped any time, and later resumed. However, it cannot be carried on without being continuously monitored.

g. Upon completion of the filling process, the connection used shall be closed and each appurtenance shall be checked for leaks. Each section of main between line valves shall be individually filled, checked and disinfected before proceeding to the next section, and before putting it into service. Test pressures shall be in accordance with applicable AWWA Standards for the type of pipe used and the design pressure.

8-4. Syphons. Under special circumstances, a pipeline may be designed as a syphon. In these cases, a section of the main will be above the hydraulic grade line and therefore is under negative pressure. This design condition requires the specific approval of the installation's Facilities Engineer. Certain design details require special attention.

a. Pipe material and thickness. The pipe material and wall thickness shall be specifically designed for negative pressure. This requires a rigid pipe wall. Thin wall pipe, such as steel, may collapse under these conditions if not specially designed for negative pressure.

b. Air-vacuum valves. Air release and vacuum valves would defeat the design of a pipeline syphon. Their use must be carefully considered and should be limited to reaches of positive pressure if at all.

USF200011038

APPENDIX A

REFERENCES

Government Publications

Department of the Army, the Navy, and the Air Force

MIL-HDBK-1008	Fire Protection for Facilities, Engineering, Design, and Construction

Department of the Army and the Air Force

TM 5-810-5/AFM 88-8, Chap.4	Plumbing
TM 5-809-10/AFM 88-3, Chap. 13	Seismic Design for Building
TM 5-811-4/AFM 88-45	Civil Engineering Corrosion Control-Cathodic Protection Design
TM 5-813-1/AFM 88-10, Vol. 1	Water Supply: Sources and General Considerations
TM 5-813-3/AFM 88-10, Vol. 3	Water Supply: Water Treatment
TM 5-813-4/AFM 88-10, Vol. 4	Water Supply: Water Storage
TM 5-813-7/AFM 88-10, Vol. 7	Water Supply for Special Projects
AFM 85-21	Operation and Maintenance of Cross Connection Control and Backflow Prevention Systems
AFR 86-5	Planning Criteria and Waivers for Airfield
AFM 88-10, Chap. 6	Water Supply: Water Supply for Fire Protection
AFM 88-15	Air Force Design Manual—Criteria and Standards of Air Force Construction

Non-Government Publications

American Railway Engineering Association (AREA), 59 East Van Buren Street, Chicago, Illinois 60605

Manual for Railway Engineering (each chapter issued and dated separately)

American Society of Mechanical Engineers (ASME), United Engineering Center, 345 E. 47th St., New York, New York 10017

Boiler and Pressure Vessel Code and Interpretations:

Section VIII	Pressure Vessels, Division 1

USF200011039

American Water Works Association (AWWA), 6666 West Quincy Avenue, Denver, Colorado 80235

C101	Thickness Design of Cast-Iron Pipe
C150	Thickness Design of Ductile Iron Pipe
C200	Steel Water Pipe 6 Inches and Larger
C203	Coal-Tar Protective Coatings and Linings for Steel Water Pipelines - Enamel and Tape - Hot-Applied
C205	Cement-Mortar Protective Lining and Coating for Steel Water Pipe - 4 inch and Larger - Shop Applied
C209	Cold Applied Tape Coatings for Special Sections, Connections, and Fittings for Steel Water Pipelines
C300	Reinforced Concrete Pressure Pipe, Steel Cylinder Type, for Water and Other Liquids
C301	Prestressed Concrete Pressure Pipe, Steel-Cylinder Type, for Water and Other Liquids
C302	Reinforced Concrete Pressure Pipe - Noncylinder Type, for Water and Other Liquids
C401	Selection of Asbestos - Cement Distribution Pipe, 4 inch, through 16 inch, for Water and Other Liquids
C403	Selection of Asbestos-Cement Transmission and Feeder Main Pipe
C500	Gate Valves - 3 in. through 48 inch for Water and Other Liquids
C502	Dry Barrel Fire Hydrants
C503	Wet Barrel Fire Hydrants
C504	Rubber-Seated Butterfly Valves
C506	Backflow Prevention Devices - Reduced Pressure Principle and Double Check Valve Types
C507	Ball Valves, Shaft - or Trunnion - Mounted - 6 in. through 48 inch - for Water Pressures up to 300 psi
C601	Disinfecting Water Mains
C602	Cement-Mortar Lining of Water Pipelines 4 in. (100 mm) and Larger in Place
C603	Installation of Asbestos - Cement Pipe

USF200011040

C900	Polyvinyl Chloride (PVC) Pressure Pipe, 4 inch through 12 inch, for Water
C950	Glass-Fiber-Reinforced Thermosetting - Resin Pressure Pipe
M8	A Training Course in Water Distribution
M9	Installation of Concrete Pipe
M11	Steel Pipe - Design and Installation

National Fire Protection Association (NFPA), 470 Atlantic Avenue, Boston, Massachusetts 02210

291	Marking of Hydrants
1963	Screw Threads and Gaskets for Fire Hose Connections

USF200011041

USF200011042

APPENDIX B

DISTRIBUTION SYSTEM HYDRAULIC ANALYSES

B-1. General. The sizing and location of mains, pump stations, and elevated storage facilities are dependent upon hydraulic analyses of the distribution system. The two major techniques used in analysis of distribution networks are reduction into equivalent pipes and Hard Cross Analysis. For all but the very smallest systems, these analyses are best performed on computers.

B-2. Equivalent Pipes. The equivalent pipe techniques is a means of reducing a complex pipe network into a simpler configuration. It involves the substitution of one pipe of specific diameter and variable length or specific length and variable diameter for a series of different size pipes or several parallel pipes, as long as there are no inputs or withdrawals of water between the end points of the system. Application of the equivalent pipe method is best demonstrated by example. Referring to figure B-1, assume that the pipe network shown is to be converted to an equivalent 8-inch pipe. The following procedure should be used.

a. Series of different size pipes will be converted. An example is ACD and ABD in part (A) of figure B-1 being converted to equivalent 8-inch pipes. A flow rate will be assumed through each branch, the resulting loss of head calculated through the branch, and the length of 8-inch pipe substituted, which will give the same total loss of head through each branch. For example, assume that 200 gpm flows through branch ACD and 400 gpm through ABD. Using tables or nomograms based on the Hazen-Williams formula, the loss of head through section AC is 1.51 feet per 1,000 feet of pipe length (assume C = 100 for all pipes), so the total loss of head through pipe AC is (1.51/1000) × 1000 = 1.51 feet. Likewise, the loss of head through pipe CD at a flow of 200 gpm is 6.1 feet per 1,000 feet of pipe length, which gives a loss of head through CD of (6.1/1000) × 800 = 4.9 feet. Hence, the total loss of head through ACD is 6.4 feet. The length of 8-inch pipe which will have the same total loss of head at the same flow is 6.4 ÷ (1.51/1000) = 4,240 feet. The two pipes of branch ACD can be replaced by 4,240 feet of 8-inch pipe. The total loss of head through ABD at a flow of 400 gpm is $(1.83 \times \frac{700}{1000}) + (0.75 \times \frac{2000}{1000}) = 2.78$ feet. At the same flow of 400 gpm, an 8-inch pipe has a loss of head of 5.44 feet per 1,000 feet of length, so the length of 8-inch pipe equivalent to section ABD is (2.78/5.44) × 1000 = 511 feet. Part (B) of figure B-1 shows the configuration of the system after branches ACD and ABD have been converted to equivalent 8-inch pipes.

b. The 8-inch equivalent pipes for ACD and ABD will be converted into a single equivalent 8-inch pipe. Since it is known that water passing through ACD must have the same loss of head as water passing through ABD, a constant loss of head value can be assumed. For purposes of this example, a loss of head of 10 feet between A and D is arbitrarily chosen. At this total loss of head, the loss of head per 1,000 feet of length in ACD is 2.36 feet and in ABD is 19.6 feet. Referring again to nomographs or tables based on the Hazen-Williams equation, it can be determined that the flows producing these losses of head are 255 gpm in ACD and 800 gpm in ABD. Thus, the total flow from A to D with a loss of head of 10 feet is 1,055 gpm. At this total flow, the loss of head through a single 8-inch pipe is 32.5 feet per 1,000 feet of length. For a total loss of head of 10 feet from A to D at a total flow of 1,055 gpm, a single 8-inch pipe would be (10/32.5) × 1000 = 308 feet long. Part (C) of figure B-1 shows the single 8-inch pipe which is equivalent to section ABCD shown in part (A) of figure B-1.

B-3. Alternative equivalent pipe procedure. Several variations of the equivalent pipe procedure are possible. The following is an alternative procedure for converting the pipe network of figure B-1 to a single equivalent 8-inch pipe, assuming that C = 100 for all pipes.

a. Arbitrarily select a rate of flow to be passed through both branches A, C, and D and branches A, B, and D. For this example, a flow of 0.5 mgd is used.

b. Calculate the losses of head through branches A, C, and D and branches A, B, and D.

USF200011043

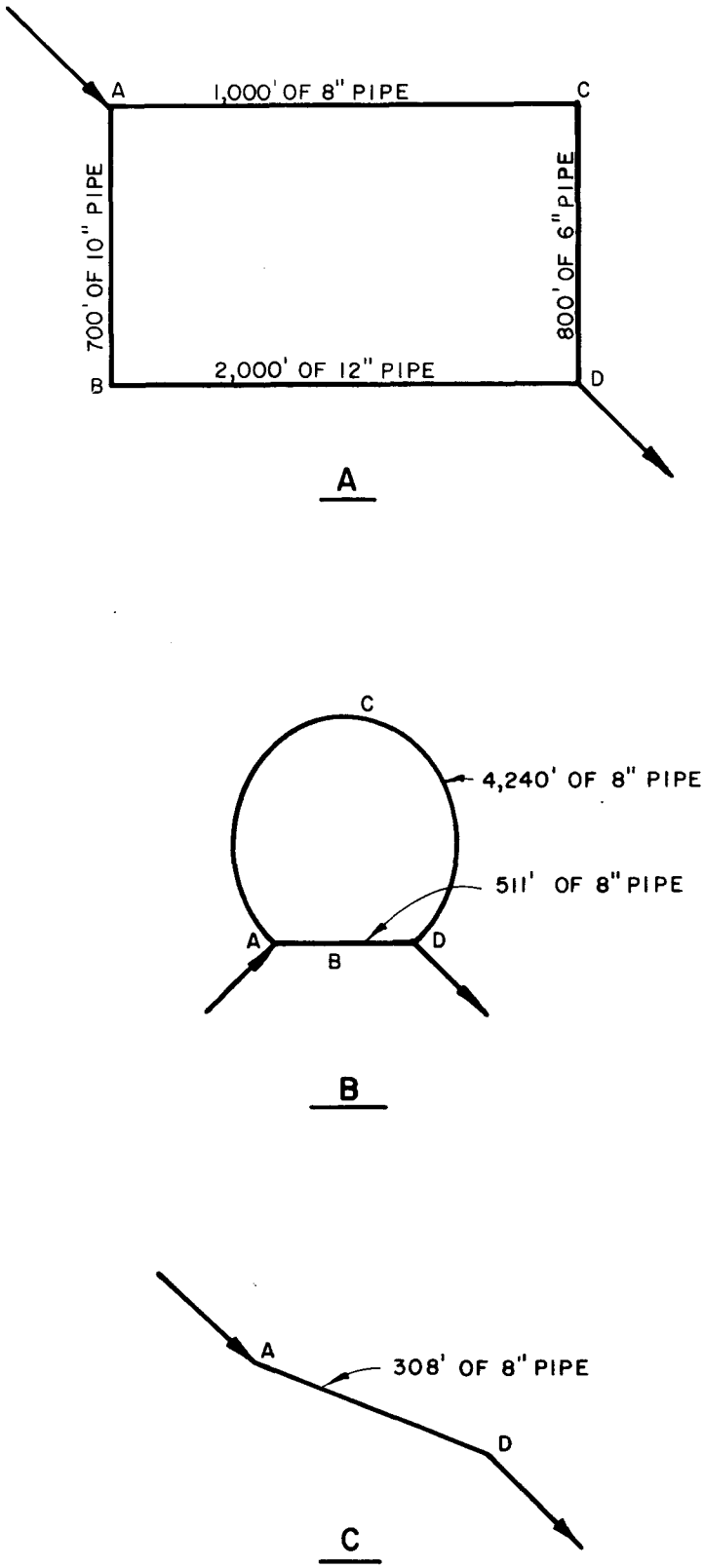

EQUIVALENT PIPE NETWORKS
(NOT TO SCALE)

Figure B-1. Equivalent pipe networks.

USF200011044

Pipe	Diameter (inches)	Loss of Head Per 1,000 ft.	Length (feet)	Loss of Head (feet)
AC	8	4.18	1,000	4.18
CD	6	16.9	800	13.52
AB	10	1.41	700	0.987
BD	12	0.58	2,000	1.16

Loss of head through A, C, and D = 4.18 ft. + 13.52 = 17.70 ft.

Loss of head through A, B, and D = 0.987 ft. + 1.16 ft. = 2.147 ft.

c. Adjust the flow in branch ABD for the same loss of head as in branch ACD. This can be done with the following formula.

$$\frac{Q_2}{Q_1} \quad \frac{HL_2}{HL_1}^{0.54} \qquad \text{(eq B-1)}$$

where

Q_1 = initial flow in pipe

Q_2 = final flow in pipe

HL_1 = initial friction loss of head through the pipe

HL_2 = final friction loss of head through the pipe

Thus:

$$Q_2 = Q_1 \frac{HL_2}{HL_1}^{0.54} = 0.5 \frac{17.7}{2.147}^{0.54}$$

Q_2 = 1.56 mgd in ABD (loss of head = 17.7 ft.)

d. Find the total rate of flow through branches ABD and ACD with a loss of head of 17.7 feet in both branches. The total flow is equal to 1.56 mgd + 0.5 mgd = 2.06 mgd.

e. Determine the length of 8-inch pipe which will have a loss of head of 17.7 feet at a rate of flow of 2.06 mgd. At this rate of flow in an 8-inch pipe, the loss of head is 57.3 feet per thousand feet of pipe length. The total equivalent pipe length is:

Length of equivalent 8-inch pipe =

$$\frac{17.7}{57.3} \times 1{,}000 = 309 \text{ feet.}$$

B-4. Hardy Cross analysis. Equivalent pipe techniques can be used for finding flows or losses of head in simple systems, but more complex networks involving multiple withdrawal points and crossover pipes require different methods of solution. The Hardy Cross Analysis is one means of network analysis by which accurate determination of rates of flow and losses of head through a system can be computed. It involves application of corrections to assumed values of flow or head until the system is in hydraulic balance. If flows are to be balanced, the correction factor to be applied to network flows is found by solving:

$$\Delta Q = -\frac{\Sigma H}{n\Sigma (H/Q)} \qquad \text{(eq B-2)}$$

where Q = flow in a particular pipe

H = loss of head in that pipe

n = 1.85

In order to use the Hardy Cross Analysis, the following guidelines must be observed:

a. The configuration of the pipe network to be analyzed must be known or estimated. This includes pipe lengths, pipe diameters, and coefficients of roughness.

b. The locations and magnitudes of inflows and outflows to and from the system must be known or estimated.

c. Flows in either a clockwise or counterclockwise direction may be considered positive and those in the opposite direction will be negative. For example, if clockwise flows are assumed to be positive, counterclockwise flows will be negative. The same rule also applies for values of losses of head. Thus, the terms in the numerator of the above equation will always have the appropriate sign. The term in the denominator must always have a positive value because corresponding H and Q values have the same sign, therefore H/Q is always positive.

d. The sign of the calculated correction, ΔQ, must be observed when modifying the flows in a pipe loop. Pipes appearing in more than one loop are subject to the combined corrections for the loops in which they appear. An example of the Hardy Cross Analysis is shown in figure B-2 and in table B-1. Figure B-2 gives the configuration of the pipe network and inflows and withdrawals from the network. The initial flow assumptions are shown in table B-2. All pipes are assumed to have a roughness coefficient of 100; final flow values are shown in table B-3.

B-5. Other methods of hydraulic analysis. Other hydraulic analysis techniques may be used if appropriate. Such techniques may include, but are not limited to, Newton Raphson network analysis and network simulation with analog computers.

USF200011045

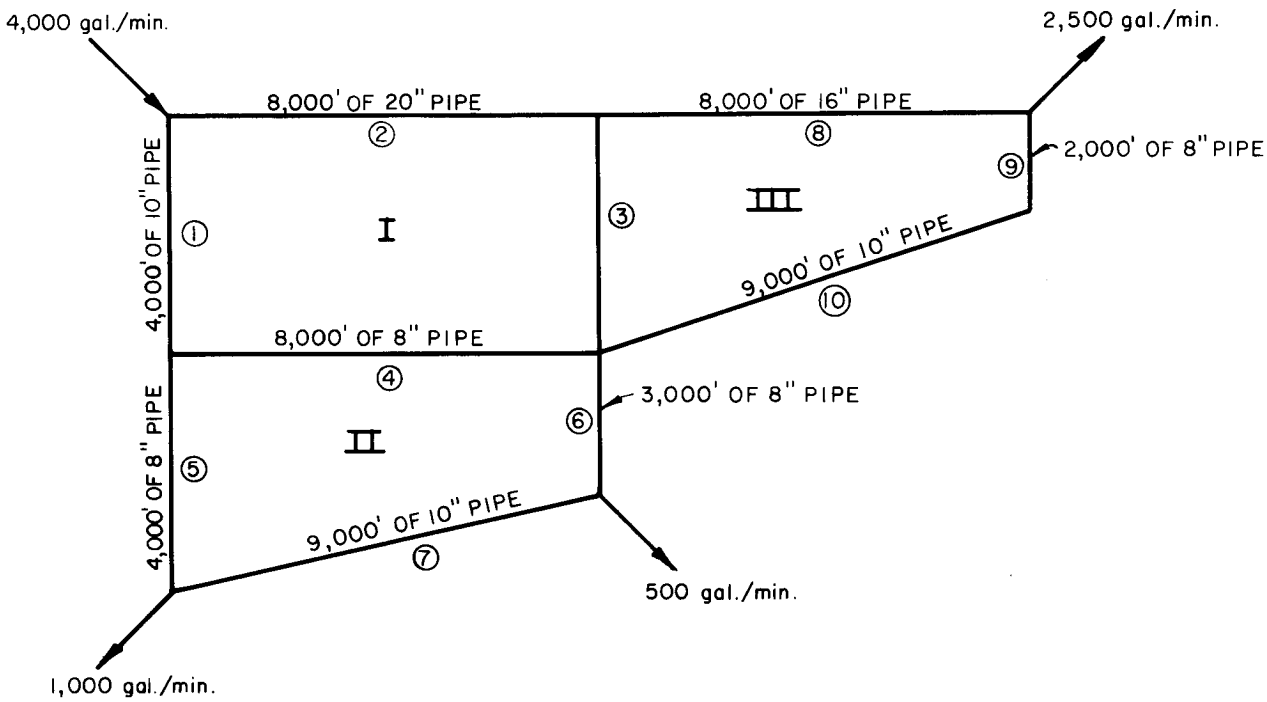

EXAMPLE PIPE NETWORK FOR
HARDY CROSS ANALYSIS
(NOT TO SCALE)

Figure B-2. Example pipe network for Hardy Cross Analysis.

USF200011046

Table B-1. Computations for Hardy Cross Analysis.

Trial 1

Loop Number	Pipe Number	Pipe Diam. (in.)	Pipe Length (ft)	Initial Flow (gal/min)	Loss of Head (ft)	$\frac{H}{Q}$	$nS\frac{H}{Q}$	SH	DQ (gal/min)	Adjusted Flow (gal/min)
I	1	10	4,000	−1,000	− 40.0	0.040			− 62	−1,062
	2	20	8,000	+3,000	+ 21.0	0.007			− 62	+2,038
	3	8	4,000	+1,000	+118.4	0.118			−388	+ 612
	4	8	8,000	− 500	− 65.6	0.131	0.548	33.8	+174	− 326
II	4	8	8,000	+ 500	+ 65.6	0.131			−174	+ 326
	5	8	4,000	− 500	− 32.8	0.066			−236	− 736
	6	8	3,000	+1,000	+ 88.8	0.089			−236	+ 764
	7	10	9,000	+ 500	+ 25.0	0.050	0.622	146.6	−236	+ 264
III	3	8	4,000	−1,000	−118.4	0.118			+388	− 612
	8	16	8,000	+2,000	+ 29.5	0.015			+326	+2,326
	9	8	2,000	− 500	− 16.4	0.033			+326	− 174
	10	10	9,000	− 500	− 25.0	0.050	0.400	−130.3	+326	− 174

Trial 2

Loop Number	Pipe Number	Pipe Diam. (in.)	Pipe Length (ft)	Initial Flow (gal/min)	Loss of Head (ft)	$\frac{H}{Q}$	$nS\frac{H}{Q}$	SH	DQ (gal/min)	Adjusted Flow (gal/min)
I	1	10	4,000	−1,062	− 44.8	0.042			+ 16	−1,046
	2	20	8,000	+2,938	+ 20.3	0.007			+ 16	+2,954
	3	8	4,000	+ 612	+ 47.7	0.078			− 46	+ 566
	4	8	8,000	+ 326	− 29.8	0.091	0.403	− 6.6	+ 62	− 264
II	4	8	8,000	+ 326	+ 29.8	0.091			− 62	+ 264
	5	8	4,000	− 736	− 67.3	0.091			− 46	− 782
	6	8	3,000	+ 764	+ 54.0	0.071			− 46	+ 718
	7	10	9,000	+ 264	+ 7.7	0.029	0.522	+ 24.2	− 46	+ 218
III	3	8	4,000	− 612	− 47.7	0.078			+ 46	− 566
	8	16	8,000	+2,326	+ 38.8	0.017			+ 62	+2,388
	9	8	2,000	− 174	− 2.3	0.013			+ 62	− 112
	10	10	9,000	− 174	− 3.6	0.021	0.239	− 14.8	+ 62	− 112

USF200011047

Table B-1. Computations for Hardy Cross Analysis—Continued.

Trial 3

Loop Number	Pipe Number	Pipe Diam. (in.)	Pipe Length (ft)	Initial Flow (gal/min)	Loss of Head (ft)	$\frac{H}{Q}$	$nS\frac{H}{Q}$	SH	DQ (gal/min)	Adjusted Flow (gal/min)
I	1	10	4,000	−1,046	−43.5	0.042			+5	−1,041
	2	20	8,000	+2,954	+20.5	0.007			+5	+2,959
	3	8	4,000	+566	+41.1	0.073			−8	+558
	4	8	8,000	−264	−20.1	0.076	0.366	−2.0	+2	−262
II	4	8	8,000	+264	+20.1	0.076			−2	+262
	5	8	4,000	−782	−75.2	0.096			+3	−779
	6	8	3,000	+718	+48.3	0.067			+3	+721
	7	10	9,000	+218	+5.4	0.025	0.488	−1.4	+3	+221
III	3	8	4,000	−566	−41.1	0.073			+8	−558
	8	16	8,000	+2,388	+40.9	0.017			+13	+2,401
	9	8	2,000	−112	−1.0	0.009			+13	−99
	10	10	9,000	−112	−1.6	0.014	0.209	−2.8	+13	−99

Trial 4

Loop Number	Pipe Number	Pipe Diam. (in.)	Pipe Length (ft)	Initial Flow (gal/min)	Loss of Head (ft)	$\frac{H}{Q}$	$nS\frac{H}{Q}$	SH	DQ (gal/min)	Adjusted Flow (gal/min)
I	1	10	4,000	−1,041	−43.2	0.041			+7	−1,034
	2	20	8,000	+2,959	+20.5	0.007			+7	+2,966
	3	8	4,000	+558	+40.0	0.072			−3	+561
	4	8	8,000	−262	−19.8	0.076	0.363	−2.5	+5	−257
II	4	8	8,000	+262	+19.8	0.076			−5	+257
	5	8	4,000	−779	−74.7	0.096			+2	−777
	6	8	3,000	+721	+48.6	0.067			+2	+723
	7	10	9,000	+221	+5.5	0.025	0.488	−0.8	+2	+223
III	3	8	4,000	−558	−40.0	0.072			−3	−561
	8	16	8,000	+2,401	+41.3	0.017			+4	+2,405
	9	8	2,000	−99	−0.8	0.008			+4	−95
	10	10	9,000	−99	−1.3	0.013	0.204	−0.8	+4	−95

USF200011048

Table B-2. Initial flow assumptions

Pipe number	Flow (gal/min)	Direction of flow
1	– 1,000	Counterclockwise
2	+ 3,000	Clockwise
3	+ 1,000	Clockwise (Loop 1)
4	– 500	Counterclockwise (Loop 1)
5	500	Counterclockwise
6	+ 1,000	Clockwise
7	+ 500	Clockwise
8	+ 2,000	Clockwise
9	– 500	Counterclockwise
10	– 500	Counterclockwise

Table B-3. Final flow values

Pipe number	Flow (gal/min)	Direction of flow
1	– 1,034	Counterclockwise
2	+ 2,966	Clockwise
3	+ 561	Clockwise (Loop 1)
4	– 257	Counterclockwise (Loop 1)
5	777	Counterclockwise
6	+ 723	Clockwise
7	+ 223	Clockwise
8	+ 2,405	Clockwise
9	– 95	Counterclockwise
10	– 95	Counterclockwise

USF200011049

USF200011050

APPENDIX C

THRUST RESTRAINT

C-1. General requirements. Thrust forces occur in watermains when the pipeline changes directions, stops, or changes size. On pipelines with unrestrained joints, as used in ductile iron pipe installations, thrust blocks or restrained joints are required. For welded steel pipelines, flanged joints and lugged joints in concrete and ductile iron pipelines, other forms of anchorage are not usually required. All thrust anchorages shall be designed for a safety factor of not less than 1.5 under maximum pressure loading. The magnitude of hydrostatic thrust may be determined from the following formula:

At bends: $T = 2\pi r^2 p \sin \frac{\Delta}{2}$ (eq C-1)

At dead end or branch: $T = \pi r^2 p$

where:

T = thrust in pounds

r = radius of pipe joints in inches

p = water pressure in psi

Δ = bend deflection angle

C-2. Thrust blocks. Thrust block size is calculated based on the bearing capacity of the soil:

Area of block $= L \times D = \frac{T}{a}(F.S.)$ (eq C-2)

where:

L = length of block in feet

D = depth of block in feet

T = thrust in pounds

a = safe bearing valve for soil in psf

F.S. = factor of safety

EXAMPLE C-1. Calculate the thrust block bearing area required for a 12-inch pipe of a 90-degree bend, internal pressure of 120 psi including surge, allowable soil bearing pressure of 3000 psf.

Solution:

$T = 2(3.14)(36)(120)(\sin 45)$ (eq C-1)

$T = 19{,}180$ lbs

$L \times D \frac{19180}{3000}$ (1.5) (eq C-2)

$L \times D = 9.59$ s.f.

for $D = 2.5$ ft., $L = 3.8$ ft.

Design of thrust blocks for vertical bends is the same as for horizontal bend. For top bends, the block must be sized to adequately resist the vertical component of thrust with the dead weight of the block, bend, water in the bend and overburden. Steel straps are used to tie the pipe to the thrust block when the block is placed below the pipe, and reinforcing steel may be necessary to resist tensile forces within the block.

C-3. Restrained joints. Restrained joints are used as an alternate to thrust blocks to avoid uncertainties such as excavation behind a block. For ductile iron pipe, the length to be restrained is calculated as follows:

$$L = \frac{4\pi r^2 p\,(F.S.) \tan \frac{\Delta}{2}}{(2f \tan \frac{\Delta}{2}) + (D\,s)} \quad \text{(eq C-3)}$$

where:

L = length to be restrained on each side of bend in feet

r = radius of pipe in inches

p = water pressure in psi

F.S. = factor of safety

Δ = bend deflection angle

D = pipe outside diameter in feet

f = conduit frictional resistance in plf

s = passive soil pressure in psf

Conduit frictional resistance is calculated from the following equation, using values in Table C-1 and table C-2.

$f = A f_c C_s + \pi w RHD \tan (f_p \Delta)$ (eq C-4)

where:

A = conduit surface area in sq. ft. per lin. ft.

f_c = ratio of pipe cohesion to soil cohension

USF200011051

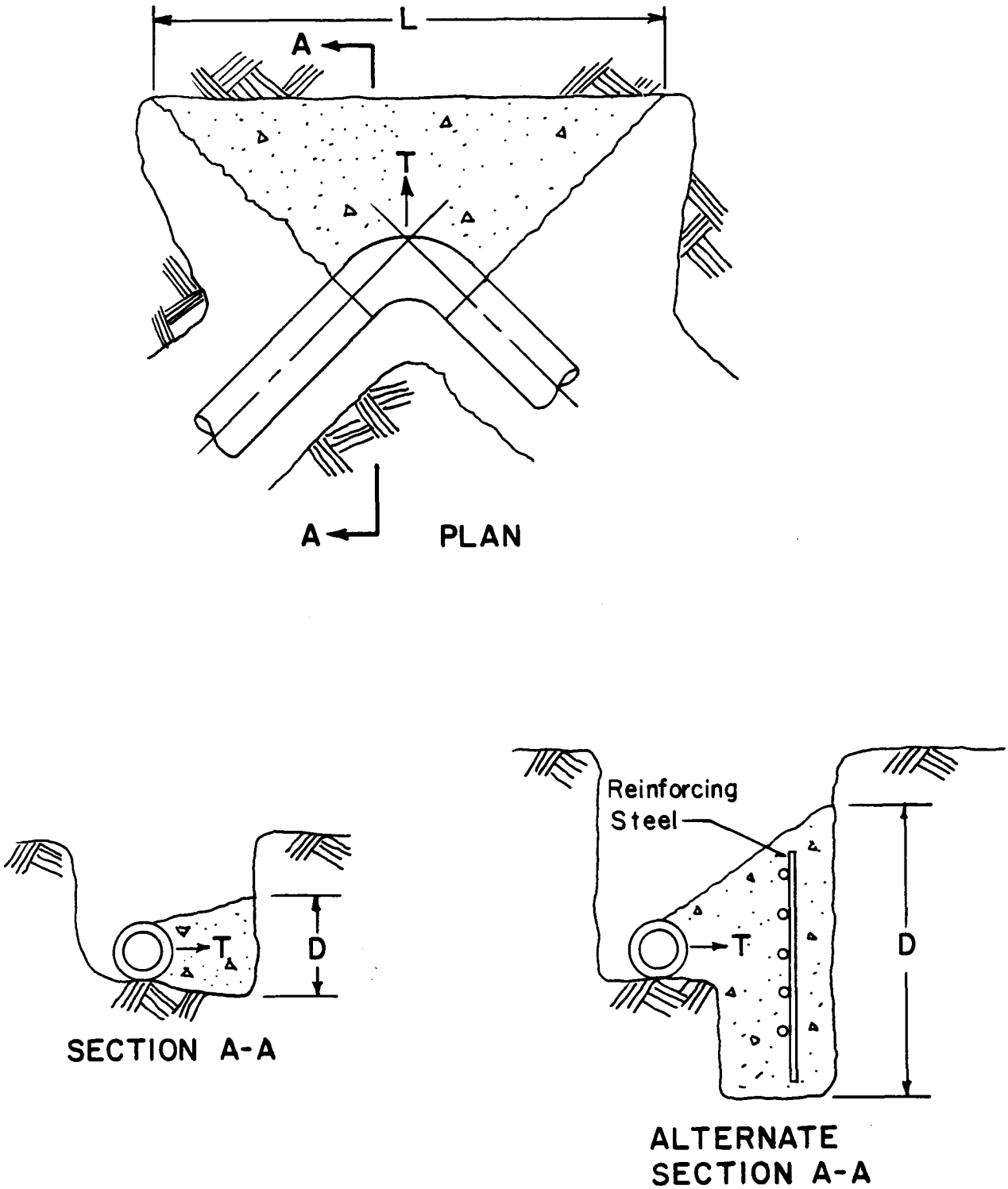

Figure C-1. Typical thrust blocking.

USF200011052

C_s = soil cohesion in psf

w = soil unit weight in pcf

R = reduction factor

H = cover above conduit in feet

f_p = ratio of pipe friction angle to soil friction angle

Passive soil pressure is calculated according to the Rankine Theory by the following equations:

$$s = w\left(H + \frac{D}{2}\right)N + 2\,C_s\,\sqrt{N} \qquad \text{(eq C-5)}$$

$$N = \tan^2\left(45° + \frac{\Delta}{2}\right) \qquad \text{(eq C-6)}$$

EXAMPLE C-2. Calculate the restrained length for a 24-inch ductible iron pipe.

Given: D = 2.15 feet

r = 12.52 inch

p = 250 psi

F.S. = 1.5

Δ = 45 degrees

w = 110 pcf

H = 3.5 feet

C_s = 500 psf

Cohesion moist granular soil, friction angle of 17 degrees, from Table C-1:

f_p = 0.65

f_c = 0.35

Solution:

$$N = \tan^2(45 + 22.5) \qquad \text{(eq C-6)}$$

$$= 5.83$$

$$s = (110)(3.5 + 1.1)(5.83) + (2)(500)(2.41) \qquad \text{(eq C-5)}$$

$$= 2950 + 2410$$

$$= 5360 \text{ psf}$$

$$A = \pi D = (3.14)(2.15) = 6.75 \text{ sq. ft./lin. ft.}$$

$$f = (6.75)(0.35)(500) + (3.14)(110)(.75)(3.5)(2.15)\tan(0.65)(45)$$

$$= 1181 + 2273 \text{ plf}$$

$$L = \frac{(4)(3.14)(157)(250)(1.5)(.414)}{(4)(2273)(.414) + (2.15)(5360)} \qquad \text{(eq C-3)}$$

$$= 20.0 \text{ feet}$$

For normal pipe lengths of 18 feet, restrain two joints on each side of bend.

Table C-1. Soil friction and cohesion factors

Soil Description	Friction Angles (degrees)	C_s	f_p	f_c
Sand, dry well graded	44.5	0	0.76	0
Sand, saturated, well graded	39	0	0.80	0
Silt, dry, passing 200 sieve	40	0	0.95	0
Silt, saturated, passing 200 sieve	32	0	0.75	0
Cohesive granular soil wet to moist	13 - 22	385-920	0.65	0.35
Clay, wet to moist	11.5 - 16.5	460-1,175	0.50	0.50
at maximum compaction			0.50	0.80

Table C-2. Reduction factors

Existing Conditions	Reduction Factor
General Construction - backfill soils compacted to critical void ratio	2/3
Well compacted backfill and selected backfill	3/4
Shallow cover - H less than one half of D	1/2

USF200011053

USF200011054

BIBLIOGRAPHY

American Society of Civil Engineers. *Pipeline Design for Water and Wastewater.* Committee on Pipeline Planning, Pipeline Division, New York, N.Y. (1975)

American Water Works Association *A Training Course in Water Distribution.* AWWA M8, Denver, Colorado (1962).

American Water Works Association, *AWWA Standard for Dry-Barrel Fire Hydrants.* AWWA C503, Denver, Colorado (1973).

American Water Works Association, *AWWA Standard for Wet-Barrel Fire Hydrants.* AWWA C503, Denver, Colorado (1975).

American Water Works Association, *Installation of Concrete Pipe.* AWWA Manual M9, Denver, Colorado (1961).

American Water Works Association, *Installation, Operation, and Maintenance of Fire Hydrants.* AWWA Manual M17, Denver, Colorado (1970).

American Water Works Association, *Recommended Practice for Backflow Prevention and Cross-Connection Control.* AWWA Manual M14, Denver, Colorado (1966).

American Water Works Association, *Sizing Water Service Lines and Meters.* AWWA Manual M22, Denver, Colorado (1975).

American Water Works Association, *Steel Pipe - Design and Installation.* AWWA M11, Denver, Colorado (1974).

Angele, Gustave J., Sr., *Cross Connections and Backflow Prevention.* American Water Works Association, Denver, Colorado (1974).

Becker, Robert J.; Rossum John R. and Russelman, Heinz B.; "Main Disinfection Methods and Objectives - Joint Discussion." *Journal of the American Water Works Association,* 61:79 (1969).

Benjes, H.H. AND Vansant, R.E., "How to Select Valves for Water and Wastewater Service." *Water and Wastes Engineering,* Volume 5, No. 5 (May 1968).

Carl, Kenneth J., "Choice, Distribution, and Location of Hydrants." *Water and Wastes Engineering,* Volume 5, No. 5 (May 1968).

Clark, J.W.: Viessman, Warren, Jr.; and Hammer, M.J., *Water Supply and Pollution Control* (2nd Edition). International Textbook Company, Scranton, Pennsylvania (1971).

Eide, Owen F., "Minimum Service Standards". *Journal of American Water Works Association,* 64:295 (1972.

Fair, G.M.; Geyer, J.C.; and Okun, D.A.; *Elements of Water Supply and Wastwater Disposal.* John Wiley & Sons, Inc., New York, N.Y. (1971).

Hammer, Mark, J., *Water and Waste-Water Technology.* John Wiley & Sons, Inc., New York, N.Y. (1975).

Insurance Services Office, *Grading Schedule for Municipal Fire Protection.* Insurance Services Office, New York, N.Y. (1973).

Kachadoorian, Reuben, "Earthquake" Correlation Between Pipeline Damage and Geologic Environment." *Journal of the American Water Works Association,* 68:165 (1976).

Larson, T.E., "Deterioriation of Water Quality in Distribution Systems." *Journal of the American Water Works Association,* 58:1307 (1966).

Linsley, Ray K. and Franzini, Joseph B., *Water-Resources Engineering* (2nd Edition), McGraw-Hill Book Company, New York, N.Y. (1972).

Nesbeitt, William D., "PVC Pipe in Water Distribution: Reliability and Durability". *Journal of the American Water Works Association,* 67:576 (1975).

Pentecost, Frank C., "Design Guidelines for Distribution Systems." *Journal of the American Water Works Association,* 66-332 (1974).

Rossie, W.L., Jr., "Control of Water Quality in Transmission and Distribution Systems." *Journal of the American Water Works Association,* 67:425 (1975).

Smith, Wayne W., "How to Anchor Mains Against Thrust Forces." *Water Works Engineering,* 116:96 (1963).

USF200011055

Symons, George E., *Pipes and Piping.* Water and Wastes Engineering Manual of Practice Number Two, Reuben H. Donnelly Corporation, New York, N.Y. (1967).

Symons, George E., *Pumps and Pumping.* Water and Wastes Engineering Manual of Practice Number One, Reuben H. Donnelly Corporation, New York, N.Y. (1966).

Symons, George E., *Valves, Hydrants, and Fittings.* Water and Wastes Engineering Manual of Practice Number Four, Reuben H. Donnelly Corporation, New York, N.Y. (1968).

Twort, A.C.; Hoather, R.C. and Law, F.M.; *Water Supply.* American Elsevier Publishing Company, Inc., New York, N.Y. (1974).

Uhlig, Herbert H., editor, *Corrosion Handbook.* John Wiley & Sons, Inc., New York, N.Y. (1948).

University of Southern California, *Manual of Cross-Connection Control.* Foundation for Cross-Connection Control and Hydraulic Research, University of Southern California, Los Angeles, California (1974).

USF200011056

The proponent agency of this publication is the Office of the Chief of Engineers, United States Army. Users are invited to send comments and suggested improvements on DA Form 2028 (Recommended Changes to Publications and Blank Forms) direct to HQDA (DAEN-ECE-G), WASH DC 20314-1000.

By Order of the Secretaries of the Army and the Air Force.

JOHN A. WICKMAN, JR.
General, United States Army
Chief of Staff

Official

R.L. DILWORTH
Brigadier General, United States Army
The Adjutant General

LARRY D. WELCH, *General, USAF*
Chief of Staff

Official

NORMAND G. LEZY, *Colonel, USAF*
Director of Administration

DISTRIBUTION:

Army: To be distributed in accordance with DA Form 12-34B, Requirements For Water Supply Distribution System.

Air Force: F

☆U.S. GOVERNMENT PRINTING OFFICE : 1995 O - 388-421 (PO. 00372)

USF200011057